SCHEDULE 22 – COMMON CONNECTION CHARGING METHODOLOGY

Introduction

1. This Schedule 22 sets out the Common Connection Charging Methodology (CCCM). The CCCM is the whole of this Schedule 22 excluding only this introductory section.

2. Each DNO Party is obliged by Standard Licence Condition 13 to have a connection charging methodology in force (each a **Connection Charging Methodology**). Each DNO Party is obliged by Standard Licence Condition 13 to include the CCCM within its Connection Charging Methodology.

3. The DNO Party will include within the document containing its Connection Charging Methodology other matters which are outside the scope of the CCCM.

4. The CCCM is split into two sections numbered '1' and '2', and refers to other sections of the document in which the CCCM is to be included. When each DNO Party includes the CCCM within the document containing its Connection Charging Methodology, the DNO Party shall replace such section numbering and cross-references with the section numbers and cross-references appropriate for its document.

5. Modifications to this Schedule 22 are governed by the provisions of this Agreement.

6. The glossary forming part of the CCCM contains definitions of terms and acronyms used in the CCCM. In the case of any conflict between the defined terms and acronyms set out in the CCCM (on the one hand) and the definitions and rules of interpretation set out in Clause 1 of this Agreement (on the other), the defined terms and acronyms set out in the CCCM shall prevail for the purposes of the CCCM.

Common Connection Charging Methodology

Section 1 – Common Connection Charging Methodology

This Section sets out the Common Connection Charging Methodology that is implemented to ensure a consistent approach in the way your Connection Charge is calculated.

1.

Minimum Scheme

1.1 The Minimum Scheme is the Scheme with the lowest overall capital cost (as estimated by us), solely to provide the Required Capacity. The Minimum Scheme will be subject to:

- accepted industry standards, including the requirements of the Distribution Code;
- the status and configuration of the Relevant Section of Network (RSN);
- the standard sizes and types of equipment currently used by us on our Distribution System which shall be reasonable in all the circumstances;
- maintaining our ability to minimise regulatory penalties associated with the Interruptions Incentive Scheme and the Guaranteed Standards of Performance; and
- where the Customer is an LDNO, maintaining the Customer's ability to minimise regulatory penalties associated with the Guaranteed Standards of Performance.
- and shall be consistent with our statutory and licence obligations including the requirement to develop, maintain and operate an efficient, co-ordinated and economical electricity Distribution System.

1.2 We will make available our design policies and standards as appropriate.

1.3 Subject to paragraphs 1.4 and 1.7 below, we will calculate the Connection Charge based on the estimated costs of the Minimum Scheme.

1.4 In certain circumstances we may decide to design an Enhanced Scheme. This will include one or more of the following:

- additional assets not required as part of the Minimum Scheme;

- assets of a larger capacity than required by the Minimum Scheme;
- assets of a different specification than required by the Minimum Scheme.

1.5 If we decide to design an Enhanced Scheme, the Connection Charge that will apply will be the lower of the Connection Charge associated with the Minimum Scheme and the Connection Charge associated with the Enhanced Scheme.

1.6 The Connection Charge associated with the Enhanced Scheme will be calculated subject to the exclusion of costs of any additional assets not necessary for the provision of your connection.

1.7 We may recover the reasonable costs incurred, both direct and indirect, in providing a connection and may, where allowed by our Licence, apply a margin on some of those costs. The factors taken into account by us to calculate the Connection Charge will include, but are not limited to:

- industry standards governing the Distribution System;
- the Required Capacity;
- available capacity of the existing Distribution System;
- whether any necessary extension or Reinforcement of the existing Distribution System is by underground cable or overhead lines;
- whether any diversionary work is required as a result of the development and the required disconnection of any assets;
- the length of cable or line required;
- type of ground requiring excavation, the type and extent of reinstatement necessary (including New Roads and Street Works Act requirements and any other relevant legislation), and the need for road, bridge crossings etc;
- any Electrical Plant and civil costs required, allowing for any civil works undertaken by you with our agreement;
- the cost of installing communication equipment;

- the costs of installing system management equipment;
- the requirement to work outside of normal working hours;
- the costs of undertaking the design;
- the costs of securing wayleaves/easements for plant, cables or lines including any consents;
- the costs of securing suitable substation sites including any necessary Land Rights;
- any overhead line surveys required;
- the costs of public enquiries and environmental impact studies;
- charges for any other costs associated with the work on Sites of Special Scientific Interest (SSSI), railway lines etc; and
- any variations in respect of the actual costs that were reasonably incurred as specified in the Connection Offer.

Cost Allocation

1.8 The costs to be charged to you as a Connection Charge may be split into three categories:

- Costs for providing the connection which are to be paid in full by you (see paragraphs 1.10 to 1.15);
- Costs for providing the connection which are to be apportioned between you and us (see paragraphs 1.16 to1.28; and
- Costs to be paid by you in respect of works that have previously been constructed or are committed and are used to provide the connection (see paragraph 1.29).

1.9 Some costs may be borne in full by us and will not be included in your Connection Charge (see paragraphs 1.30 to1.32).

Costs to be paid in full by you

1.10 The costs of providing Extension Assets are charged in full to you.

1.11 Where you have requirements for additional security or the characteristics of your load requires us to install assets in excess of the Minimum Scheme then you will pay the costs in excess of the Minimum Scheme in full. Where you have requested a three-phase connection and/or a supply voltage that is not necessary to meet the Required Capacity, and the local Distribution System is not of the requested number of phases and/or voltage, then you will pay in full the cost of Reinforcement of the Distribution System to your specified number of phases and/or voltage.

1.12 The costs of the future operation and maintenance of any additional assets requested by you (over and above those associated with the Minimum Scheme) will be payable in full. This would normally be levied as a one-off charge representing the net present value of the future operation and maintenance costs and calculated as a percentage (specified in Section [6]) of the additional capital cost of the Scheme. See Example 3 for an illustration of where you request additional security.

1.13 Work required to reconfigure the Distribution System to meet your requirements where no additional Network or Fault Level Capacity is made available shall be charged in full to you. See Example 8D.

1.14 Where the Extension Assets would normally require the extension of existing switchgear equipment and this is not possible, the cost of the full replacement of the switchgear (using the nearest standard size) will be charged to you, provided that there is no Reinforcement of the Distribution System (see paragraph 1.20).

1.15 For generation connections only, Reinforcement costs in excess of the high-cost project threshold of £200/kW shall be charged to you in full as a Connection Charge. Where both this paragraph 1.15 and paragraph 1.30 below apply to a generation connection, the provisions of paragraph 1.30 shall take precedence.

Costs to be apportioned between you and us

1.16 Reinforcement is defined as assets installed that add capacity (network or fault level) to the existing shared use Distribution System. The costs of Reinforcement shall be

apportioned between you and us. The methods used to apportion the costs of Reinforcement are set out in paragraphs 1.23 – 1.28. There are five exceptions to this rule. Where an exception applies Reinforcement will treated as Extension Assets and costs will not be apportioned. These exceptions are described below and the application of exceptions 1, 2, 4, and 5 is demonstrated in the Examples.

1.17 Exception 1: Where the Reinforcement is:

- down stream of the POC; and
- over and above the Minimum Scheme; and
- provided at our request; and
- provided by connecting two points on the existing Distribution System; and
- there is little or no prospect of the capacity created being required within the next five years,

then the apportionment rules will not apply. You will pay the costs associated with the Minimum Scheme and we will pay the costs over and above the Minimum Scheme. See Example 2B.

1.18 Exception 2: Where the Reinforcement is in excess of the Minimum Scheme and is at your request, the Reinforcement will be treated as Extension Assets and the apportionment rules will not apply. The costs in excess of the Minimum Scheme will be borne in full by you (see paragraphs 1.11 and 1.12 above).

1.19 Exception 3: Where the Reinforcement is provided to accommodate a Temporary Connection the Reinforcement will be treated as Extension Assets and the apportionment rules will not apply. The costs associated with the Temporary Connection will be borne in full by you. Temporary Connections are defined as connections that are only required for a period of up to five years, but exclude connections to provide the initial connection to a development, where the Reinforcement will subsequently be required for the permanent connection.

1.20 Exception 4: Where the replacement of switchgear results in an increase in fault level capacity and:

- that increase is solely as a result of the fault level rating of the standard switchgear equipment used by us being higher than that of the existing switchgear; and
- that increase in fault level capacity is not needed to accommodate your connection.

then, unless the switchgear adds network capacity and the Security CAF applies, the switchgear replacement will be treated as Extension Assets and the apportionment rules will not apply. You will pay the full cost of the switchgear replacement. See Example 7B.

1.21 Exception 5: Where the Reinforcement:

- is provided by connecting two points on the existing distribution system; and
- is providing connection to a development with a number of Entry/ Exit Points,

then the additional network length (measured from suitable points close to the site boundaries which would allow for a clear demarcation of Contestable and Non-Contestable Work) required to provide connectivity within the development will be considered to be Extension Assets and the apportionment rules will not apply. You will pay the full cost of the additional network length. See Example 8B.

1.22 For avoidance of doubt, where the costs of Reinforcement are borne in full by you and any capacity created is used to accommodate new or increased connections within the ECCR Prescribed Period, the ECCR will apply (see paragraphs 1.35 - 1.38).

1.23 The costs of Reinforcement will be apportioned using one of two Cost Apportionment Factors (CAFs), dependent upon which factor is driving the requirement for Reinforcement:

- The ‘Security CAF’; and
- The ‘Fault Level CAF’.

1.24 The following definitions are used in the application of the CAFs.

Existing Capacity	For existing Customers their Existing Capacity will be either: (k) the Maximum Capacity used in the calculation of their use of system charges; or (l) for Customers who are not charged for use of system on the basis of their Maximum Capacity the lower of: No. of phases x nominal phase-neutral voltage (kV) x fuse rating (A); and The rating of the service equipment.
Fault Level Contribution from Connection	is the assessment of the Fault Level contribution from the equipment to be connected taking account of its impact at the appropriate point on the Distribution System. Where an existing Customer requests a change to a connection then the ‘‘Fault Level Contribution from Connection’’ is defined as the incremental increase in Fault Level caused by the Customer.
New Fault Level Capacity	is the Fault Level rating, following Reinforcement, of the equipment installed after taking account of any restrictions imposed by the local network Fault Level capacity. For the avoidance of doubt this rule will be used for all equipment types and voltages.
New Network Capacity	is either the secure or non-secure capacity of the Relevant Section of Network (RSN) following Reinforcement. Whether secure or non-secure capacity is applicable depends upon the type of capacity that can be provided from the RSN. For example, if the capacity provided to the Customer by the RSN is secure, but the capacity requested by the Customer at the point of connection is non-secure, the secure capacity will be used. See Example 12. The capacity to be used will be based on our assessment of the thermal ratings, voltage change and upstream restrictions and compliance with our relevant design, planning and security of supply policies. The equipment ratings to be used are the appropriate operational rating at

	the time of the most onerous operational conditions taking account of seasonal ratings and demand.
Relevant Section of Network (RSN)	is that part or parts of the Distribution System which require(s) Reinforcement. Normally this will comprise: · the existing assets, at the voltage level that is being reinforced, that would have been used to supply you (so far as they have not been replaced) had sufficient capacity been available to connect you without Reinforcement; and/or · the new assets, at the same voltage level, that are to be provided by way of Reinforcement. Where it is unclear what assets would have supplied the Customer in the event that sufficient capacity had been available, the existing individual assets with the closest rating to the new assets will be used. See Example 13. There may be more than one RSN (e.g. at different voltage levels).
Required Capacity	is the Maximum Capacity agreed with the Customer. In the case of multiple connections (e.g. a housing development) it may be adjusted after consideration of the effects of diversity. Where an existing Customer requests an increase in capacity then it is the increase above their Existing Capacity.

1.25 The 'Security CAF' is applied, where the costs are driven by either thermal capacity or voltage (or both) as assessed against the relevant standard. This rule determines the proportion of the Reinforcement costs that should be paid by you as detailed below.

$$\text{Security CAF} = \frac{\text{Required Capacity}}{\text{New Network Capacity}} \times 100\%$$

(max 100%)

1.26 The 'Fault Level CAF' is applied, where the costs are driven by Fault Level restrictions. This rule determines the proportion of the Reinforcement costs that should be paid by you as detailed below.

$$\text{Fault Level CAF} = 3 \times \frac{\text{Fault Level Contribution from Connection}}{\text{New Fault Level Capacity}} \times 100\% \quad \text{(max 100\%)}$$

1.27 For clarity, where you require an augmentation to an existing connection, both the Security and Fault Level CAFs will be based on the increase in Required Capacity and increase in Fault Level Contribution from the connection respectively. Any related increases within the previous three year period will be taken into account in determining the increase in the Required Capacity or increase in the Fault Level Contribution from the connection to be applied within the CAF.

1.28 On some Schemes there may be interaction between the two rules. In such cases, the 'Security' CAF will be applied to costs that are driven by the security requirement. The 'Fault Level CAF' will be applied to costs that are driven by Fault Level requirements. See the Examples for illustrations on the application of the CAFs.

Recovery of costs for previous works

1.29 Where, in order to provide your connection;

- we propose to utilise existing Distribution System assets that were previously installed to provide a connection to another Customer, and
- the other Customer has paid us (either in part or in full) a Connection Charge for those assets or paid an ICP for those assets which were adopted by us

you may be required to make a payment towards them. The ECCR prescribes the circumstances where such payment is required. Charges for such works only apply where the new connection is provided within the ECCR Prescribed Period.

Costs to be paid in full by us

1.30 We will fully fund Reinforcement carried out greater than one voltage level above the voltage at the POC to the existing Distribution System.

1.30A We will fully fund Reinforcement carried out to allow the installation of all equipment at an existing premises which remain connected via an existing low-voltage single, two or three phase service fused at 100 amperes or less per phase which is metered with whole-current metering; provided that (to the extent relevant):

- the Reinforcement is carried out to allow the installation of equipment as part of a single application for a single or multiple installations;
- any and all electricity generation equipment installed has a rated output not greater than 16 amperes per phase (or not greater than 16 amperes per phase at any single premises if a single application for multiple installations);
- any and all equipment installed which does not constitute a modification to the existing service conforms with the technical requirements of the following standards (notwithstanding that the equipment may have an input current that is more than 16 amperes per phase):
    - BS EN 61000-3-2 Electromagnetic compatibility (EMC). Limits. Limits for harmonic current emissions (equipment input current ≤ 16 A per phase); and
    - BS EN 61000-3-3 Electromagnetic compatibility (EMC). Limits. Limitation of voltage changes, voltage fluctuations and flicker in public low-voltage supply systems, for equipment with rated current ≤ 16 A per phase and not subject to conditional connection

1.30B Where it is necessary to modify a low-voltage single phase looped service for an existing premises, this shall be considered to have remained connected under Paragraph 1.30A above.

1.31 Where another LDNO with a distribution network that is connected to our Distribution System requires an increase in capacity to its distribution network, the voltage at the POC for assessing the one voltage rule will be:

- In the case of a new extension to the network of the other LDNO, the voltage of connection at which the Extension Assets will connect to the other LDNO's network; or

- In the case of additional capacity required in respect of a Customer connected to the existing assets of the LDNO, the voltage at which the Customer connects to the LDNO's network; or

- In the case of additional capacity required to meet general load growth on the LDNO's network then the Reinforcement costs will be borne by us. The LDNO will be required to provide justification in such circumstances.

1.32 The table below illustrates the application of the one voltage rule in relation to Reinforcement. You will be required to contribute towards the cost of any Reinforcement provided at one voltage level above the POC, up to and including the cost of circuit breakers provided at that voltage.

England & Wales

	Voltage at the POC			
Voltage of Scheme Assets	**LV (below 1000V)**	**HV (above 1kV but less than 22kV)**	**EHV (above 22kV but less than 72kV)**	**132kV**
132kV Network	We fund	We fund1	Apportioned	Apportioned
132kV/ EHV Substation	We fund	EHV circuit breakers only Apportioned	Apportioned	Not applicable
EHV Network	We fund	Apportioned	Apportioned	Not applicable
132kV/ HV Substation	HV circuit breakers only Apportioned	Apportioned	Not applicable	Not applicable
EHV/HV Substation	HV circuit breakers only Apportioned	Apportioned	Not applicable	Not applicable
HV Network	Apportioned	Apportioned	Not applicable	Not applicable

HV/ LV Substation	Apportioned	Not applicable	Not applicable	Not applicable
LV Network	Apportioned	Not applicable	Not applicable	Not applicable

Except where there is direct transformation from 132kV to HV when the costs are apportioned.

Scotland

	Voltage at the POC		
Voltage of Scheme Assets	LV (below 1000V)	HV (above 1kV but less than 22kV)	EHV (above 22kV but less than 72kV)
EHV Network	We fund	Apportioned	Apportioned
EHV/HV Substation	HV circuit breakers only Apportioned	Apportioned	Not applicable
HV Network	Apportioned	Apportioned	Not applicable
HV/ LV Substation	Apportioned	Not applicable	Not applicable
LV Network	Apportioned	Not applicable	Not applicable

Additional Cost Allocation for Flexible Connections

1.32A To facilitate a Flexible Connection, we may need to install and maintain specific system management equipment, either or both at your Premises and further upstream in other parts of the Distribution System. Some of the costs associated with installing, operating and maintaining the system management equipment will be directly attributed to your connection and be included as part of your Connection Charge (see illustrative table in paragraph 1.32B). The proportion of the costs which you must fund depends on whether your connection forms part of a Dedicated Scheme or a Wide Area Scheme, as described below:

Type 1 – Dedicated Scheme: A scheme managing constraint(s) where there are no Customers downstream of the constraint(s) who could connect new or additional demand or generation without being controlled by the Dedicated Scheme:

- Type '1A' considers a scenario involving only one customer; and
- Type '1B' considers a scenario involving multiple customers.

Type 2 – Wide Area Scheme: A scheme managing constraint(s) where there are Customers downstream of the constraint(s) who could connect new or additional demand or generation without being controlled by the Wide Area Scheme.

1.32B The table below illustrates the scheme types and methodology for cost recovery associated with each type of Flexible Connection. The methodology covers Type 1A, Type 1B and Type 2 (as each is described in paragraph 1.32A).

Typical connection components[22]	**Type 1A - Single**	**Type 1B - Multiple**	**Type 2 - Wide Area**
Extension Assets for customer	You fund	You fund	You fund
End user control unit for the customer	You fund	You fund	You fund
Local system management unit	You fund	Shared equally between participants	We fund
Scheme management unit	You fund	Shared equally between participants	We fund
Central management unit	N/A	N/A	We fund
Scheme specific ongoing costs e.g. communications	We fund	We fund	We fund

[22] We will describe the main connection components within the relevant connection offer, which will also include the funding arrangements for each such connection component (if different to that stated in this illustrative table).

Recovered Equipment and Deferment of Asset Replacement

1.33 Normally, you will not receive any credit for the value of any equipment recovered by us as a result of the connection. However, where a Temporary Connection is to be Disconnected, we will determine the value of recovered equipment that we can subsequently reuse (net of depreciation and removal and refurbishment costs). Where there is a net value in the recovered equipment that can be reused, we will pay you the amount of such net value subject to a de minimis level as specified in Section [6].

1.34 You will not receive any credit for the value of any deferment of asset renewal expenditure by us.

Rebates

1.35 For Distribution System assets where you have paid in full, then you may be entitled to a future rebate of charges should another Customer connect to those assets. These circumstances are detailed in the ECCR.

1.36 For Distribution System assets where you have paid in proportion to your Required Capacity, then you are not entitled to a future rebate of charges should another Customer connect to those assets.

1.37 Your entitlement to receive payments under the ECCR only applies to connections made within the ECCR Prescribed Period from the first provision of the connection.

1.38 These provisions do not apply where your connection was made before 6 April 2017 and we have adopted the assets from an ICP. However, for connections made on or after 6 April 2017, these provisions do apply to assets we have adopted from an ICP (as further described in the ECCR).

Speculative Developments

1.39 Developments which have one or more of the following characteristics may be considered as speculative:

- their detailed electrical load requirements are not known;

- the development is phased over a period of time and the timing of the phases is unclear;
- the capacity requested caters for future expansion rather than the immediate requirements of (an) end user(s);
- the capacity requested caters for future speculative phases of a development rather than the initial phase(s) of the development; or
- the infrastructure only is being provided, with no connections for end users requested.

1.40 Where we are asked to provide a connection to a speculative development then the cost of the work including any Reinforcement is charged in full and the CAFs do not apply. Additional charges to reflect ongoing operation, repair and maintenance costs may also be levied.

1.41 We may, at our sole discretion, allow capacity to be reserved on the infrastructure provided to service the speculative development on the commercial terms agreed between you and us in respect of the development.

Connection Alterations

1.42 Where you request an alteration to your connection arrangements, including a change in the supply voltage, the costs are charged in full to you. For the avoidance of doubt increases in the Required Capacity are dealt with in accordance with the previous Sections.

National Electricity Transmission System Operator (NETSO) Charges

1.43 We have an obligation under the CUSC to discuss certain requests for connection or changes in connection with the NETSO. Such requests are typically for large electrical demand or generation projects. Under certain circumstances, as determined by the NETSO, they may apply charges to assess the potential impact on the GB Transmission System of a request or the combined effect of a number of requests and these will be included in the Connection Charge, or through a separate mechanism agreed between you and us.

1.44 Subsequent to such assessment, the NETSO may also require works to be undertaken on the GB Transmission System as a condition of the connection being permitted. In the event of NETSO applying charges for these works, we will reflect these charges in our charges to you.

1.44A Should GB Transmission System works be required, NETSO may apply a cancellation charge in the event that your project is cancelled or the capacity of your project reduces. The NETSO also calculates a secured amount in respect of this cancellation charge (being a percentage of the cancellation charge, which reduces at certain trigger points). We may ask you for security in respect of this cancellation charge, but we will not ask you for more than the secured amount calculated by the NETSO.

Land Rights

1.45 Where Land Rights are required from a third party, the cost of acquiring those rights will be included in either the Connection Charge to you or through a separate mechanism agreed between you and us.

1.46 If the Land Rights that we require cannot be obtained by negotiation, we may, following discussion with you, exercise our powers of compulsory purchase (Section 10 and Schedule 3 of the Act) or apply to the Secretary of State or the Scottish Government in Scotland for a 'necessary wayleave' (paragraphs 6-8 of Schedule 4 of the Act). If we do so, the costs that we incur, including those of the Lands Tribunal/ Lands Tribunal for Scotland (which determine issues of compensation) will be charged to you. The Lands Tribunal may award compensation to the landowner and/or anyone who holds an interest in the land and this will be included in the Connection Charge or through a separate mechanism agreed between you and us.

Unmetered Supplies

1.47 For some street lighting and other installations, we may allow items of equipment to be connected to our Distribution System without a meter. This is subject to the equipment having a low and predictable pattern of consumption and meeting the requirements of The Electricity (Unmetered Supply) Regulations 2001.

1.48 Where we agree that a meter is not required the provision of such a connection is dependent on the owner entering into an unmetered Connection Agreement and providing and maintaining an auditable inventory, in a format agreed with us, so that an accurate estimate of the consumption can be produced.

1.49 Where certain criteria are met the provision of services for unmetered connections may be made via a time-based connection service charge, e.g. Rent-a-Jointer Services. This is subject to us entering into a contract with you for the provision of such services.

1.50 You may elect to appoint an accredited ICP to carry out the Contestable Work for unmetered connections. The ICP will be allowed to carry out live jointing on low voltage underground cables. Where you use an ICP, arrangements must first be established as follows:

- You will enter into an agreement with the ICP to carry out and complete the Contestable Work; and
- We will enter into an agreement and/or an Adoption Agreement with you and/or your appointed ICP as appropriate.
-

Capacity Ramping for LDNOs

1.51 For an LDNO the Required Capacity (expressed in kVA) is the Maximum Capacity to be provided at the boundary between the LDNO's distribution network and our Distribution System. This value will be agreed with us and stated in the Bilateral Connection Agreement for the relevant embedded network.

1.52 When a connection is provided to an LDNO the take-up of capacity may grow over a period of time as the site develops and individual customers are connected. In such circumstances the Bilateral Connection Agreement shall include a phased Required Capacity based on the Development Phase.

1.53 During the Development Phase a review may be undertaken annually on the anniversary of the Energisation of the embedded network. Any unused capacity

identified in such review may be released for use by other customers and the Maximum Capacity reduced to an agreed level within the Bilateral Connection Agreement.

1.54 The Required Capacity agreed with us as being required at the end of the Development Phase shall be used to determine the Required Capacity for determination of the Cost Apportionment Factors where applicable.

1.55 Should additional capacity subsequently be required, the LDNO may incur additional Connection Charges for any Reinforcement based on the increase in capacity.

Disconnection and De-Energisation

1.56 If we either Disconnect or De-energise your Entry/ Exit Point

- at the request of your Supplier; or
- due to a failure of your Supplier to comply with the terms of the DCUSA

then the cost of such disconnection or De-energisation will be borne by your Supplier.

1.57 If we either Disconnect or De-energise your Entry/ Exit Point

- at your request; or
- due to a failure by you to comply with the terms of your Connection Agreement,

then the cost of such disconnection or De-energisation will be borne by you.

1.58 On termination of your Connection Agreement, we retain the right to remove our Electrical Plant and Electric Lines and charge you if we do so. Apparatus which is not cost effective for us to recover (e.g. Electric Lines laid underground) will normally be made safe and left at the Premises, but if you require us to remove them, the cost of removal will be payable by you. All such apparatus will remain our property unless otherwise agreed in writing.

Adoption Payments

1.59 Where we adopt assets installed by an ICP we will not make any adoption payment in respect of those assets.

Competition in Connection

1.60 Where you choose to have any Contestable Work undertaken by an ICP, we levy CIC Charges associated with the design approval, inspection and adoption of the Contestable Works as set out in Section [6] and Section [7].

Worked Examples Illustrating the Application of the Connection Charging Methodology

The following Examples are to illustrate the application of the Connection Charging Methodology and are not intended to provide an accurate estimate of the charges which a person would become liable in respect of the provision of a connection. The Examples do not necessarily represent the Minimum Scheme for a specific connection application.

The figures quoted in the Examples are illustrative. Section [7] of this statement provides our charges and indicative costs to undertake various activities.

The Examples illustrate where we undertake both the Contestable and Non-Contestable Work. These costs will include the determination of the POC and assessment and design costs, though these may not be explicitly identified in the Examples.

Where Contestable Work is undertaken by an ICP, we will apply CIC Charges for services associated with the Contestable Works which would cover activities including design approval, inspection and monitoring. The CIC Charges shown in the Examples are for illustration only. For the avoidance of doubt, in each Example, where an ICP undertakes the Contestable Work, our Connection Charge will include the cost of the Non-Contestable Work and the CIC Charges but exclude the cost of Contestable Work.

The Examples are generic and standard for all LDNOs, but they do not represent the network analysis and subsequent design solutions that would be completed for an actual connection scheme. The actual designs are subject to our design polices.

Key to Illustrations

X	Circuit Breaker (any voltage)
	Switch
	Transformer
	Joint on cable
	High voltage ring main unit
	Existing cable
	Proposed cable
	Normal Open Point (NOP)
G	Generator Customer
D	Demand Customer
	Point of Connection (POC)
SS	Sub Station

Example 1: A new connection to a domestic premise

A Customer requests a LV single phase connection to a new house. The Premises can be connected to an existing LV main cable in the street.

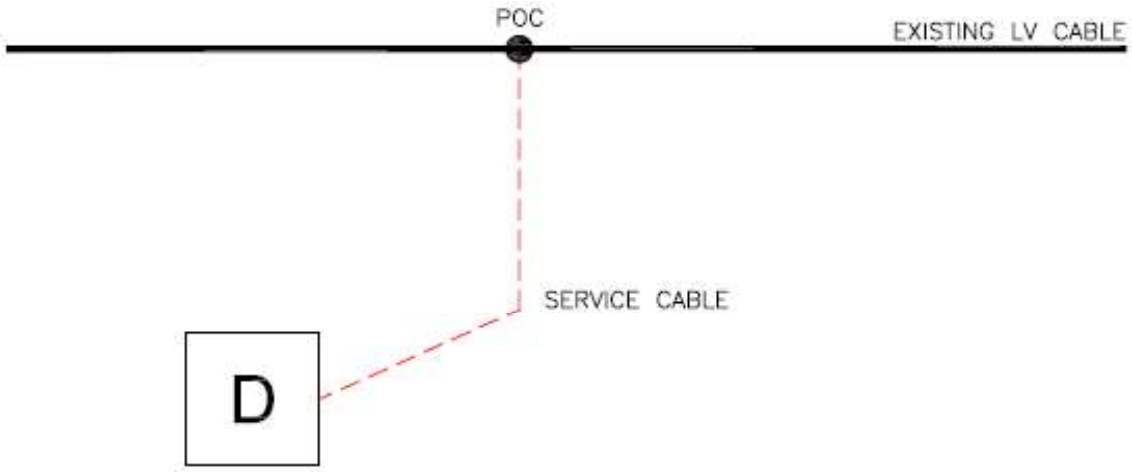

The Connection Charge for this Scheme is calculated as follows:

Extension Assets:

	Cost	**Apportionment**	**Customer Contribution**
Contestable Work			
15m service cable, excavation in footpath for joint hole to Customer laid duct, backfill and termination	£700	n/a	£700
Non-Contestable Work			
Single service breech joint	£400	n/a	£400
Total Extension Asset Cost			**£1,100**
CIC Charges			£100

Total Connection Charge = £1,100

Example 2A: New connections on a domestic housing development

A housing developer requests connections for 200 domestic Premises. The Required Capacity to supply the 200 homes is 250kVA. A new distribution substation will be established to provide the Required Capacity of the site. The Minimum Scheme requires the substation to be looped into the existing HV network.

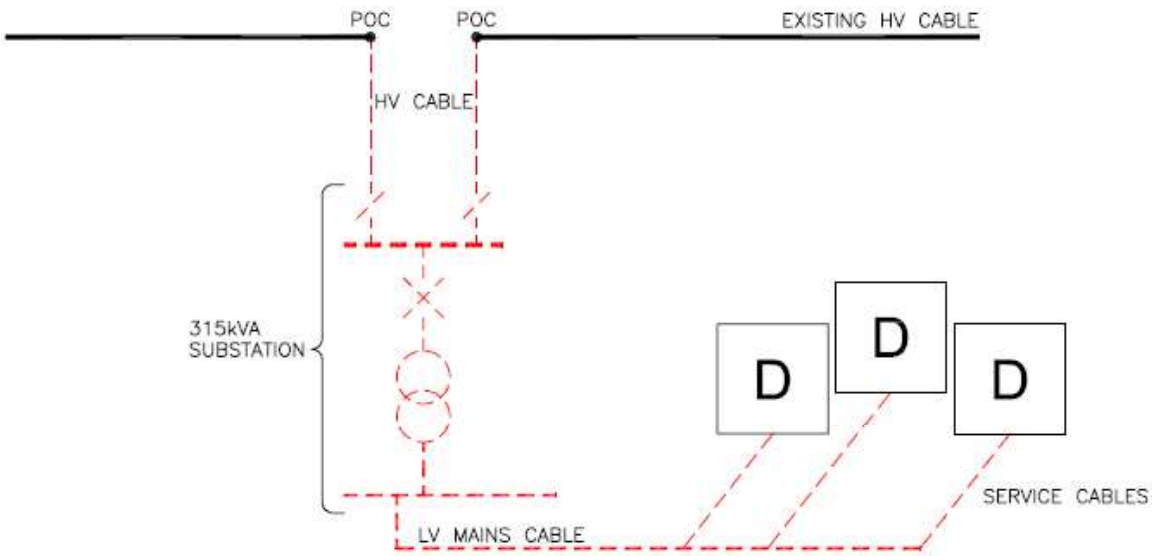

The Connection Charge for this Scheme is calculated as follows:

Extension Assets:

	Cost	Apportionment	Customer Contribution
Contestable Work			
Provision and installation 100m HV cable	£11,000	n/a	£11,000
315kVA substation	£24,000	n/a	£24,000
LV mains, service cables and terminations	£170,000	n/a	£170,000
Non-Contestable Work			
Two HV cable joints	£2,000	n/a	£2,000
Total Extension Asset Cost			**£207,000**
CIC Charges			£1,500

Total Connection Charge = £207,000

Example 2B: New connections on a domestic housing development with interconnection.

This Example demonstrates the application of two of the exceptions to the apportionment rules, Exception 1 (paragraph 1.17) and Exception 2 (paragraph 1.18).

As in Example 2A, a housing developer requests connections for 200 domestic Premises. The Required Capacity to supply the 200 homes is 250kVA. A new distribution substation will be established to provide the Required Capacity of the site. The Minimum Scheme requires the substation to be looped into the existing HV network. However, in this Example there is an option to provide an additional LV cable to interconnect the distribution substation with the existing LV network. This option is over and above the Minimum Scheme.

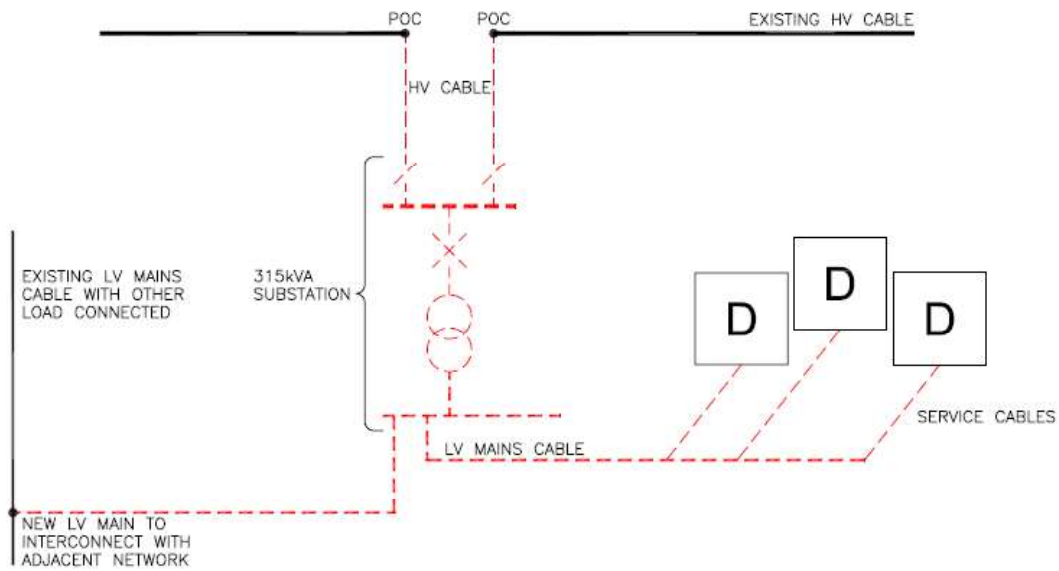

Interconnecting into the existing LV network will increase the capacity of the existing Distribution System. Therefore, the assets that connect the HV and LV network would normally be considered to be Reinforcement. These assets (as shown on the diagram above) include the HV cable, the 315kVA substation and the interconnecting LV main. They exclude the LV mains and service cables from the 315kVA substation to the Customer's development. However, whether these assets are to be considered Reinforcement or Extension Assets depends upon who requested the LV interconnection and whether any capacity created is likely to be used. One of three scenarios will apply –

a) <u>The LV interconnection is requested by the Customer (Exception 2).</u>

In this case the Reinforcement is over and above the Minimum Scheme and requested by the Customer. Therefore, Exception 2 applies and all assets (including the interconnecting LV

cable) will be treated as Extension Assets and their costs will be borne in full by the Customer. As the interconnecting LV main and associated LV joint are over and above the Minimum Scheme, a charge for their future operation and maintenance will be made.

The Connection Charge for this Scheme is calculated as follows:

Extension Assets:

	Cost	**Apportionment**	**Customer Contribution**
Contestable Works			
Provision and installation 100m 11kV cable (from existing HV network to substation)	£11,000	n/a	£11,000
315kVA substation	£24,000	n/a	£24,000
LV mains, service cables and terminations (from substation to the Customer's development)	£170,000	n/a	£170,000
Interconnecting LV Cable (from substation to existing LV network)	£10,000	n/a	£10,000
Non-Contestable Works			
Two HV cable joints	£2,000	n/a	£2,000
LV cable joint	£1000	n/a	£1,000
Difference between Minimum and the actual Scheme is £11,000. Operation & Maintenance @20%* of £11,000		n/a	£2,200
Total Extension Asset Cost	£218,000		**£220,200**
CIC Charges			£1,500

Total Connection Charge = £220,200

*Note, the 20% Operation and Maintenance figure is illustrative.

b) The LV interconnection is requested by us in order to create additional network capacity (No exception).

In this case, the assets connecting the existing HV and LV network add capacity to the existing network and none of the exceptions described in paragraphs 1.17-1.21 apply. Therefore they will be treated as Reinforcement. The costs of the Reinforcement assets that form part of the Minimum Scheme (the HV cable and associated HV joints; the 315kVA substation) will be apportioned. The interconnecting LV cable and associated LV joint are considered to be Reinforcement but, as they are over and above the Minimum Scheme and requested by us, the costs will be borne in full by us.

Reinforcement:

The RSN is that part or parts of the Distribution System that can be used to supply the Customer in both normal and abnormal running arrangements which, in this case, is the distribution substation and the HV Cables.

Security CAF calculation: the numerator in the CAF calculation is based upon the Required Capacity of the Customer, which is 250kVA. The denominator is based on the New Network Capacity following Reinforcement, which is 315kVA, i.e. the secure capacity of the distribution substation and HV cables.

The Connection Charge for this Scheme is calculated as follows:

Reinforcement:

	Cost	**Apportionment**	**Customer Contribution**
Non-Contestable Work			
Provision and installation 100m 11kV cable (from existing HV network to substation)	£11,000	250/315 =79.4%	£8,730
315 kVA substation	£24,000	as above	£19,048
Two HV cable joints	£2,000	as above	£1,587
Interconnecting LV Cable (from substation to existing LV network)	£10,000	In excess of Minimum Scheme	£0
LV Cable Joint	£1,000	In excess of Minimum Scheme	£0
Total Reinforcement Cost	**£48,000**		**£29,365**

Extension Assets:

	Cost	**Apportionment**	**Customer Contribution**
Contestable Work			
LV mains, service cables and terminations (from the substation to the Customer's development)	£170,000	n/a	£170,000
Total Extension Asset Cost	**£170,000**		**£170,000**
CIC Charges			**£1,500**

Total Connection Charge = £29,365 + £170,000 = £199,365

c) The LV interconnection is requested by us but there is little prospect of the capacity created being used (Exception 1).

In this case all the requirements of Exception 1 (paragraph 1.17) are met so the assets that connect the existing HV and LV Distribution System will be treated as Extension Assets and their costs will not be apportioned. The Customer will pay the costs associated with the Minimum Scheme in full. The interconnecting LV cable and associated LV joint as they are over and above the Minimum Scheme and requested by us, therefore the costs will be borne in full by us

The Connection Charge for this Scheme is calculated as follows:

Extension Assets:

	Cost	**Apportionment**	**Customer Contribution**
Contestable Works			
Provision and installation 100m 11kV cable (from existing HV network to substation)	£11,000	n/a	£11,000
315 kVA substation	£24,000	n/a	£24,000
LV mains, service cables and terminations (from substation to the Customer's development)	£170,000	n/a	£170,000
Non-Contestable Works			
Two HV cable joints	£2,000	n/a	£2,000
Interconnecting LV Cable (from substation to existing LV network)	£10,000	In excess of Minimum Scheme	£0
LV Cable Joint	£1000	In excess of Minimum Scheme	£0
Total Extension Asset Cost	**£218,000**		**£207,000**
CIC Charges			£1,500

Total Connection Charge = £207,000

Example 3: A new connection to a commercial Premises

A Customer requests a new LV three phase 600kVA connection to commercial Premises. Four scenarios for connection are considered below. The Minimum Scheme will be dependent on the specific circumstances as set out in paragraphs 1.1 to 1.7.

(a) Where the Minimum Scheme is a new 800kVA substation teed onto the existing HV network.

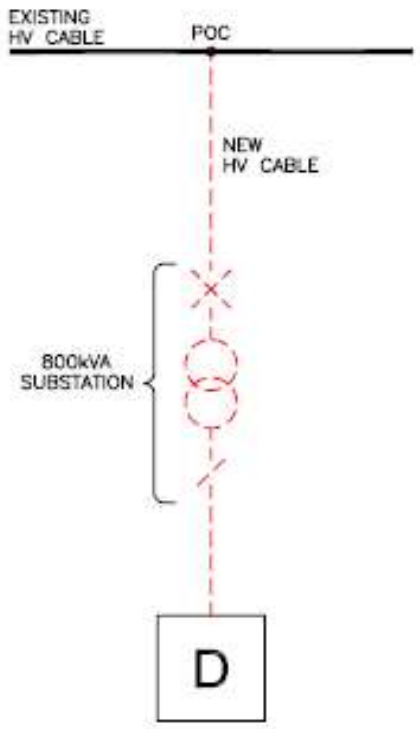

The Connection Charge for this Scheme is calculated as follows:

Extension Assets:

	Cost	**Apportionment**	**Customer Contribution**
Contestable Work			
Provision and installation of 150m of HV cable	£30,000	n/a	£30,000
800kVA substation	£17,000	n/a	£17,000
Provision and installation LV cabling	£4,400	n/a	£4,400
Metering panel	£800	n/a	£800
Non-Contestable Work			
HV joint to network	£1,900	n/a	£1,900
Total Extension Asset Cost	£54,100		**£54,100**
CIC Charges			£1,500

Total Connection Charge = £54,100

In each of the following scenarios the Customer is connected with a looped connection, as illustrated in the following diagram.

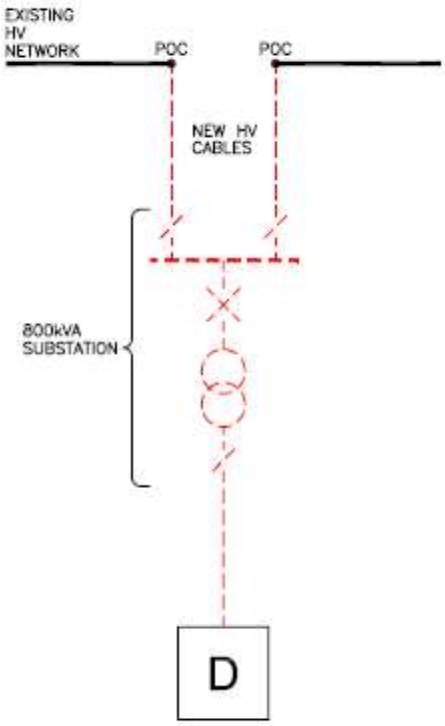

(b) The Minimum Scheme is as for scenario a) above but the Customer requests an enhanced connection arrangement where the substation is looped into existing HV network.

The Connection Charge for this Scheme is calculated as follows:

Extension Assets:

	Cost	**Apportionment**	**Customer Contribution**
Contestable Work			
Provision and installation of 300m of HV cable	£35,000	n/a	£35,000
800kVA substation	£20,000	n/a	£20,000
Provision and installation LV cabling	£4,400	n/a	£4,400
Metering panel	£800	n/a	£800
Non-Contestable Work			
HV joints to network	£2,900	n/a	£2,900
Total Extension Asset Cost	£63,100		£63,100
Difference between Minimum and the actual Scheme is £9,000. Operation & Maintenance @20%* of £9,000			£1,800
Total Extension Asset Cost			**£64,900**
CIC Charges			£1,500

Total Connection Charge = £64,900

*Note, the 20% Operation and Maintenance figure is illustrative.

(c) The Minimum Scheme is as for scenario a) above but we request an Enhanced Scheme where the substation is looped into the existing HV network.

The Connection Charge for this Scheme is calculated as follows:

Extension Assets:

	Cost	**Apportionment**	**Customer Contribution**
Contestable Work			
Provision and installation of 300m of HV cable	£35,000	Minimum Scheme	£30,000
800kVA substation	£20,000	Minimum Scheme	£17,000
Provision and installation LV cabling	£4,400	n/a	£4,400
Metering panel	£800	n/a	£800
Non-Contestable Work			
HV joints to network	£2,900	Minimum Scheme	£1,900
Total Extension Asset Cost	£63,100		**£54,100**
CIC Charges			£1,500

Total Connection Charge = £54,100

(d) The Minimum Scheme is a new 800kVA substation looped into existing HV network.

The Connection Charge for this Scheme is calculated as follows:

Extension Assets:

	Cost	**Apportionment**	**Customer Contribution**
Contestable Work			
Provision and installation of 300m of HV cable looped to network, HV Ring Main Unit, 800kVA transformer	£35,000	n/a	£35,000
800kVA substation	£20,000	n/a	£20,000
Provision and installation LV cabling	£4,400	n/a	£4,400
Metering panel	£800	n/a	£800
Non-Contestable Work			
HV joints to network	£2,900	n/a	£2,900
Total Extension Asset Cost	£63,100		**£63,100**
CIC Charges			£1,500

Total Connection Charge = £63,100

Example 4: Additional load application for commercial Premises (requiring a new connection from the HV network)

A Customer requests to increase the Maximum Capacity of their existing LV connection from 200kVA to 850kVA; an increase of 650kVA (the Required Capacity).

As the Customer's existing LV connection is unable to deliver the Required Capacity a new connection will be required from the local HV network. This will be a non-secure connection to a secure network. The Minimum Scheme is to overlay part of the nearest HV circuit (Feeder 2) which only has spare capacity of 200kVA. The Reinforcement to make the capacity available requires 1200m of existing HV cable to be overlaid with a larger capacity cable.

Following the Reinforcement the New Network Capacity will be 8000kVA. (i.e. after Reinforcement, in this particular case, the section of cable with the lowest rating in the ring represented by Feeder 1 and Feeder 2 is rated at 8000kVA).

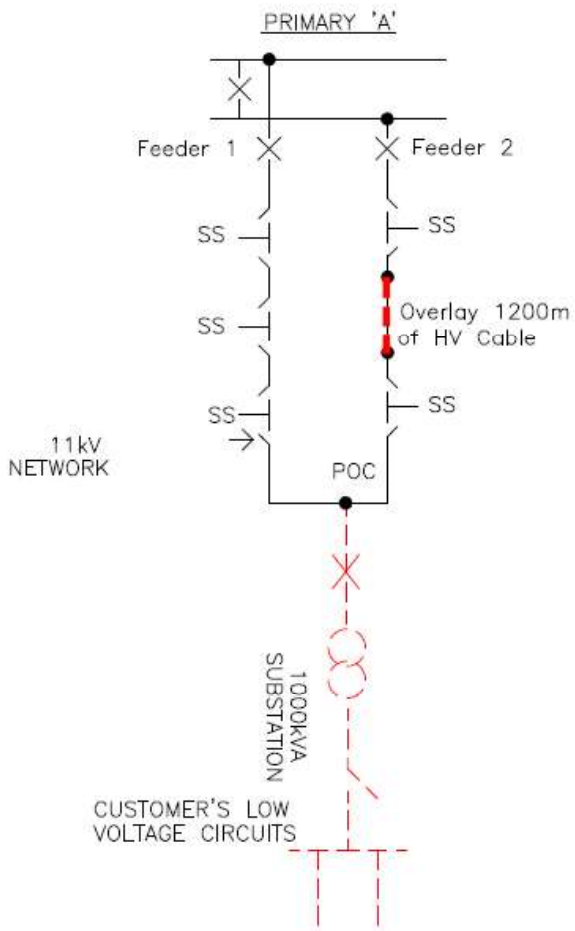

Reinforcement:

The RSN is the two feeder ring comprising Feeder 1 and Feeder 2.

Security CAF calculation: As this request is from an existing customer the numerator in the CAF calculation is based upon the increment of capacity requested, i.e. 650kVA (850kVA – 200kVA). The denominator is based upon the New Network Capacity following the Reinforcement.

Fault Level CAF calculation: This Scheme does not have any significant Fault Level contribution to the existing shared use distribution network and the Fault Level CAF is therefore not applicable here.

The Connection Charge for this Scheme is calculated as follows:

Reinforcement:

	Cost	**Apportionment**	**Customer Contribution**
Non Contestable Work			
Overlay 1200m of HV cable	£120,000	650/ 8000 X 100% = 8.1%	£9,750
HV Jointing	£4,800	As above	£390
Total Reinforcement Cost	£124,800		**£10,140**

Extension Assets:

	Cost	**Apportionment**	**Customer Contribution**
Contestable Work			
Provision and installation HV cable	£29,000	n/a	£29,000
1000kVA substation	£20,000	n/a	£20,000
Termination of Customer's LV cables	£1,400	n/a	£1,400
LV Metering panel	£800	n/a	£800
Non-Contestable Work			
HV Jointing	£1,600	n/a	£1,600
Total Extension Asset Cost	£52,800		**£52,800**
CIC Charges			£1,100

Total Connection Charge = £10,140 + £52,800 = £62,940

Example 5: Connection of a new embedded generator that requires Reinforcement involving Security and Fault Level CAFs.

A Customer requests a connection to a generator with a Required Capacity for export purposes of 3MVA. The Fault Level contribution at the primary substation from the generation connection is 10MVA.

The POC is to the existing HV network at point B and it is proposed to install 500m of HV underground cable from the POC to the Customer's installation. This is a non-secure connection that requires reinforcement of a non-secure network.

The connection requires the Reinforcement of 500m of HV overhead line between points A and B for a thermal capacity requirement and replacement of the existing 11 panel HV switchboard at the primary substation in order to increase its fault level rating from 150MVA to 350MVA. However, the new fault level will be limited by the fault level rating of the local network of 250MVA.

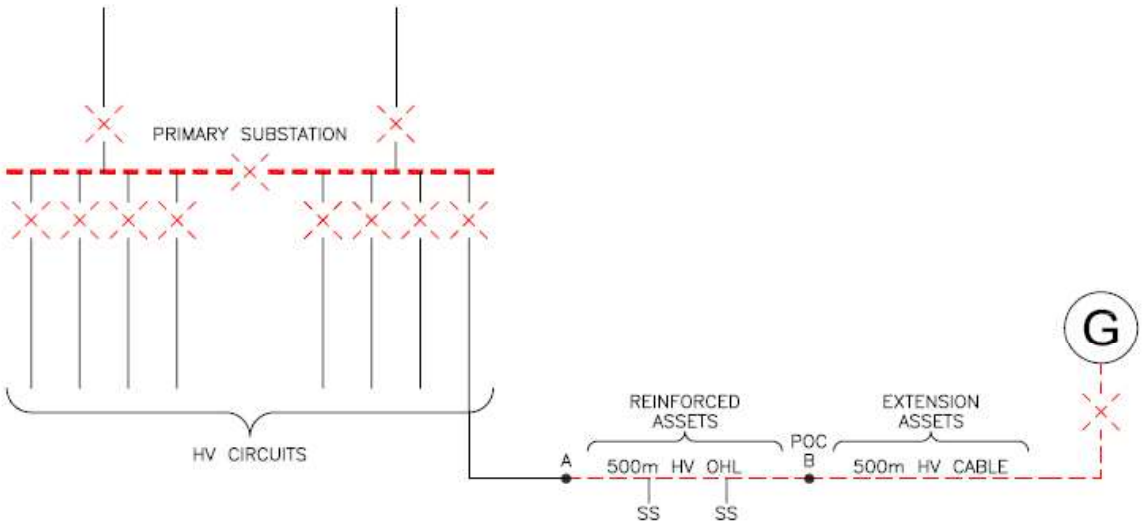

Reinforcement:

The RSN is the HV network from the primary substation to Point B.

Security CAF calculation: the numerator in the CAF calculation is based upon the Required Capacity of the Customer, i.e. 3MVA. The denominator is based on the New Network Capacity following Reinforcement, which is 7.6MVA, i.e. after Reinforcement, in this particular case, the section of cable with the lowest rating.

The RSN is the 11kV switchboard at the primary substation.
Fault Level CAF calculation: The numerator in the CAF calculation is based upon the Fault Level contribution from the Customer's new generator connection, in this Example 10MVA. The denominator is based upon the New Fault Level Capacity, which is the lower of the Fault Level capacity of the new HV switchboard, 350MVA or of the local system, 250MVA in this Example.

The Connection Charge for this Scheme is calculated as follows:

Reinforcement:

	Cost	**Apportionment**	**Customer Contribution**
Non Contestable Work			
Re-conductor of 500m of HV overhead line	£49,000	3/7.6 x 100% = 39.5% Security CAF	£19,342
Replacement of existing 11 panel 11kV switchgear	£540,000	3x(10/250) x 100% = 12.0% Fault Level CAF	£64,800
Total Reinforcement Cost	**£589,000**		**£84,142**

Extension Assets:

	Cost	**Apportionment**	**Customer Contribution**
Contestable Work			
Installation of 500m HV cable	£47,000	n/a	£47,000
HV circuit breaker at Customer's substation	£10,000	n/a	£10,000
Non-Contestable Work			
HV pole top termination	£1,400	n/a	£1,400
Total Extension Asset Cost	£58,400		**£58,400**
CIC Charges			£1,100

Total Connection Charge = £84,142 + £58,400 = £142,542

Example 6: Connection of Mixed Housing and Commercial Development

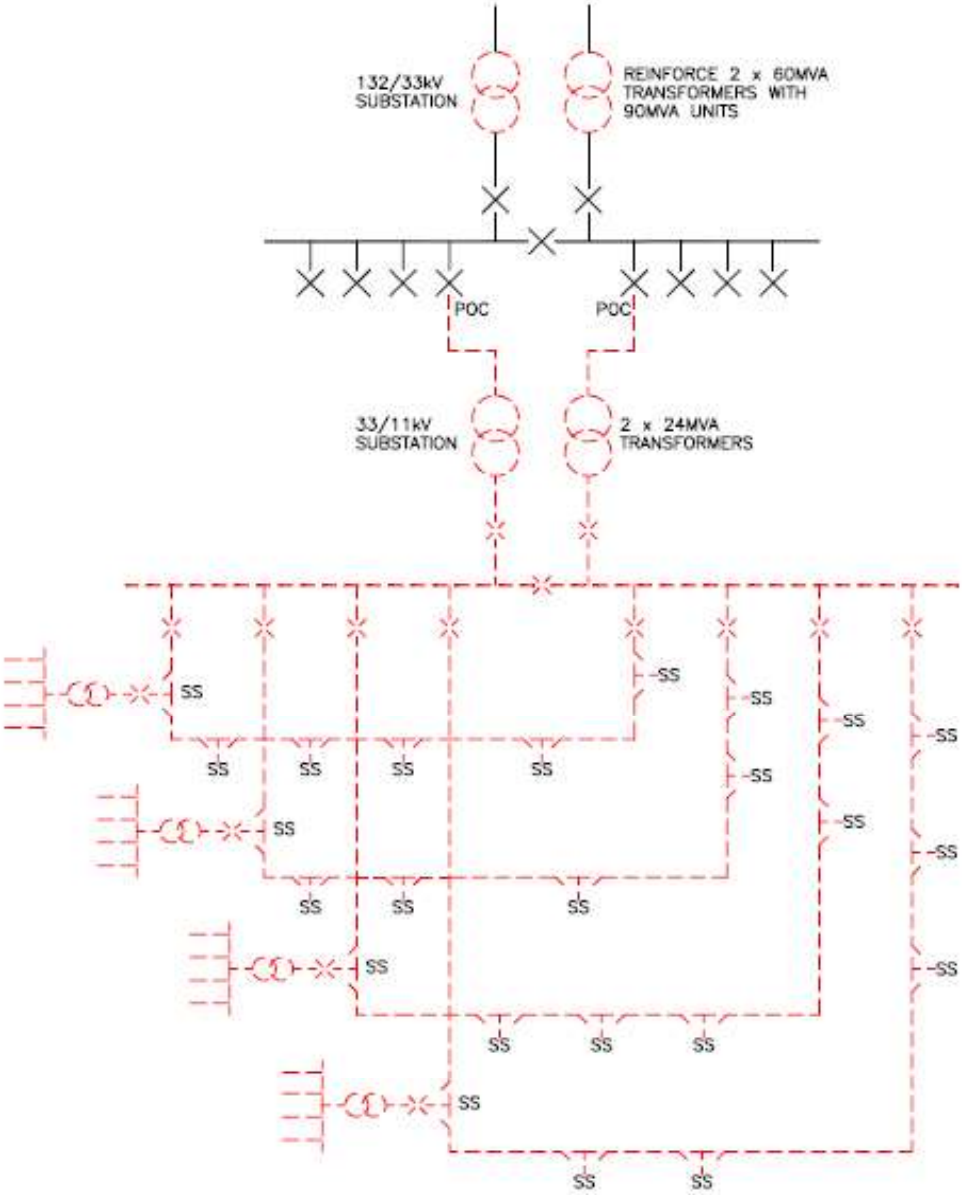

The Customer requests 18MVA for a new mixed housing & commercial development site which comprises of 7,000 plots and a mixture of small commercial Premises. The POC on the network will be at the two existing 33kV circuit breakers located at the 132/33kV substation approximately 600m from the site boundary. In order to accommodate the Required Capacity it will be necessary to reinforce the two 60MVA, 132/33kV, transformers with 90MVA transformers. It will then be necessary to extend the network and establish a 2 by 24MVA transformer 33/11kV substation on site with an extendable HV board in this new substation. The HV board will comprise of 2 incomer, 1 bus section and 8 outgoing circuit breakers. From this substation there will be 3km of HV cable required to supply 24 substations. From each of these 24 substations there will be associated LV cable and services as required.

Reinforcement:

The RSN for the Reinforcement is the transformers at the existing 132/33kV substation

Security CAF calculation: the numerator in the CAF calculation is based upon the Required Capacity of the Customer, i.e. 18MVA. The denominator is based on the secure New Network Capacity following Reinforcement, i.e. 90MVA.

Fault Level CAF calculation: This Scheme does not have any significant Fault Level contribution to the existing shared use distribution network and Fault Level CAF is therefore not applicable here.

The Connection Charge for this Scheme is calculated as follows:

Reinforcement:

	Cost	**Apportionment**	**Customer Contribution**
Non Contestable Work			
Replace two 60MVA, 132/33kV transformers with two 90MVA transformers.	£1,500,000	18/90 X 100% = 20.0%	£300,000
Total Reinforcement Cost			**£300,000**

Extension Assets:

	Cost	**Apportionment**	**Customer Contribution**
Contestable Work			
600m of 2 by 33kV cable	£180,000	n/a	£180,000
3000m of HV circuits, 24 HV/LV substations, LV cable and services	£7,000,000	n/a	£7,000,000
2 by 24MVA transformer substation	£2,000,000	n/a	£2,000,000
Non-Contestable Work			
Terminate two 33kV cables on to two existing 33kV circuit breakers.	£25,000	n/a	£25,000
Total Extension Asset Cost	£9,205,000		**£9,205,000**
CIC Charges			£15,000

Total Connection Charge = £9,205,000 + £300,000 = £9,505,000

Example 7A: New 3MVA Generation Connection, Fault Level Triggered Reinforcement

A Customer wishes to connect a new generator with a Required Capacity for export purposes of 3MVA.The connection of the generator requires the installation of 500m of 11kV cable and 1500m of overhead line between a new circuit breaker, added to the 11kV extensible switchgear panel at an existing primary substation and a new substation at the Customer's Premises. The 24MVA Fault Level contribution from the generator necessitates Reinforcement works to replace the 11kV switchgear at the existing primary substation with switchgear of a higher fault level rating.

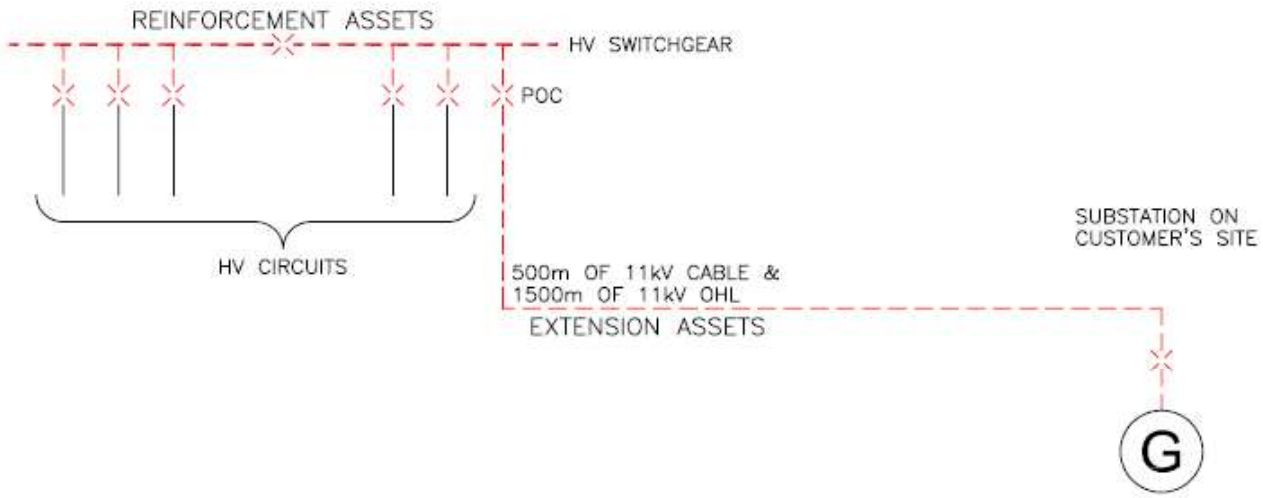

Reinforcement:

Fault Level CAF calculation: The numerator in the CAF calculation is based upon the Fault Level contribution from the Customer's new generator connection, in this Example 24MVA. The denominator is based upon the New Fault Level Capacity, in this Example the Fault Level capacity of the new 11kV switchboard, 315MVA.

The Connection Charge for this Scheme is calculated as follows:

Reinforcement:

	Cost	**Apportionment**	**Customer Contribution**
Non Contestable Work			
Replacement HV switchboard (excluding Customer's sole use circuit breaker)	£450,000	3x(24/315) x 100% = 22.9%	£102,857
Total Reinforcement Cost	£450,000		**£102,857**

Extension Assets:

	Cost	**Apportionment**	**Customer Contribution**
Non-Contestable Work			
HV circuit breaker at primary substation	£25,000	n/a	£25,000
Contestable Work			
Installation of a 500m HV cable	£40,000	n/a	£40,000
Installation of a 1500m HV overhead line	£35,000	n/a	£35,000
HV circuit breaker at Customer substation	£25,000	n/a	£25,000
Total Extension Asset Cost	£125,000		**£125,000**
CIC Charges			£1,100

Total Connection Charge = £102,857 + £125,000 = £227,857

Example 7B: New 3MVA Generation Connection, Switchgear Extension Not Possible

This example demonstrates the application of Exception 4 (paragraph 1.20).

A Customer requests to connect a new generator with a Required Capacity for export purposes of 3MVA. The connection of the generator requires the installation of the works as provided in Example 7A above. In this scenario, however, there is no Fault Level issue but, as the connection cannot be facilitated by an extension of the existing switchgear equipment in our primary substation, a full replacement of the existing switchgear installation is required. As no capacity is added to the existing shared use distribution network, the Customer will be required to fund the full cost of the switchgear installation replacement.

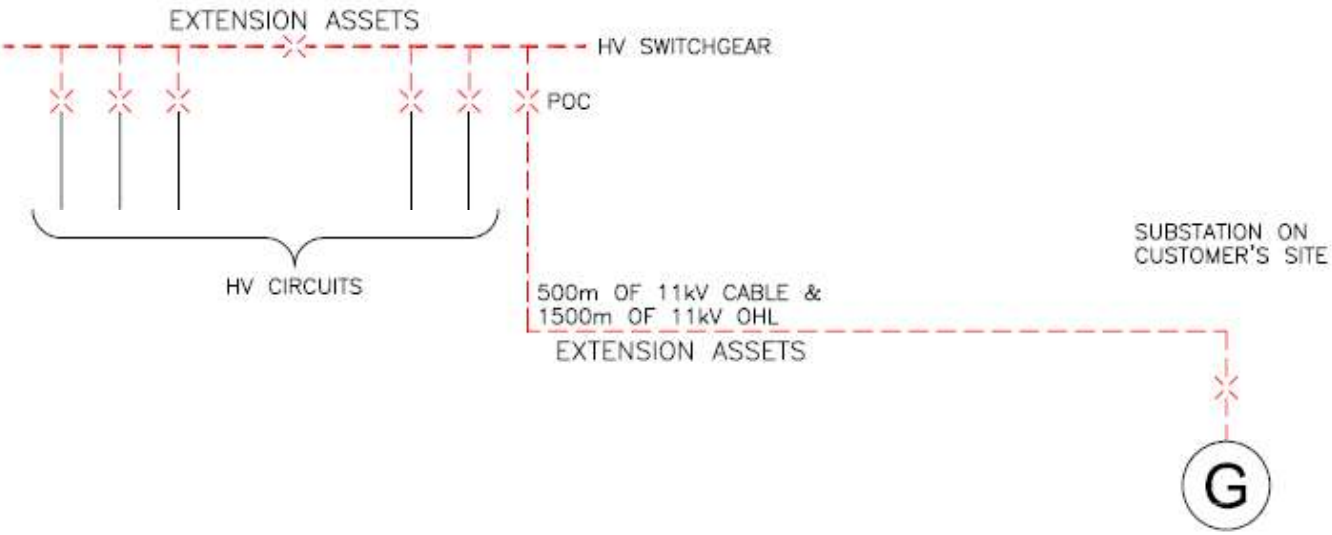

The existing switchgear had fault level rating of 250MVA. The company no longer uses switchgear with a fault level rating of 250MVA, so uses the closest equivalent switchgear used by it as standard, which has a slightly higher rating. Whilst the replacement switchgear increases the fault level capacity and could be considered Reinforcement, in this case this is due solely to the fault level rating of the standard equipment used by the company being higher than the fault level rating of the existing switchgear. The increase in fault level capacity is not required to connect the customer. Therefore, Exception 4 (Paragraph 1.20) applies and the switchgear will be considered to be Extension Assets and its costs will be charged in full to the customer.

The Connection Charge for this Scheme is calculated as follows:

Extension Assets:

	Cost	**Apportionment**	**Customer Contribution**
Contestable Work			
Installation of a 500m HV cable	£40,000	n/a	£40,000
Installation of a 1500m HV overhead line	£35,000	n/a	£35,000
HV circuit breaker at Customer substation	£25,000	n/a	£25,000
Non-Contestable Work			
Replacement 11kV switchboard	450,000	n/a	450,000
New Extension Asset circuit breaker	£25,000	n/a	£25,000
Total Extension Asset Cost	£575,000		**£575,000**
CIC Charges			£1,100

Total Connection Charge = £575,000

Example 8A: Connection of housing development with network Reinforcement

A new housing development has a Required Capacity of 2MVA to serve 900 plots. The local 11kV feeder has a network capacity of 7.7MVA based upon the limitation of the existing 400 Amp circuit breakers at Primary Substation A. The existing load on the circuit is 7.6MVA. It is therefore not possible to connect the new load to this circuit without Reinforcement works. To reinforce the circuit it is proposed to install a new circuit breaker at Primary Substation B and install a new 11kV feeder (also rated at 7.7MVA) to the local 11kV circuit. The new 11kV feeder is used to split the existing circuit from a secure two to a secure three feeder network. The newly installed cable between point A and B is 1300m long. The newly installed cable to connect the development from the POC is 1200m.

This Reinforcement will allow a POC to be taken from the local 11kV circuit to supply the new development. Three 800kVA distribution substations are established onsite. The above work represents the Minimum Scheme to provide services to the new site.

The figure below shows the proposed Reinforcement and POC to the 11kV network:

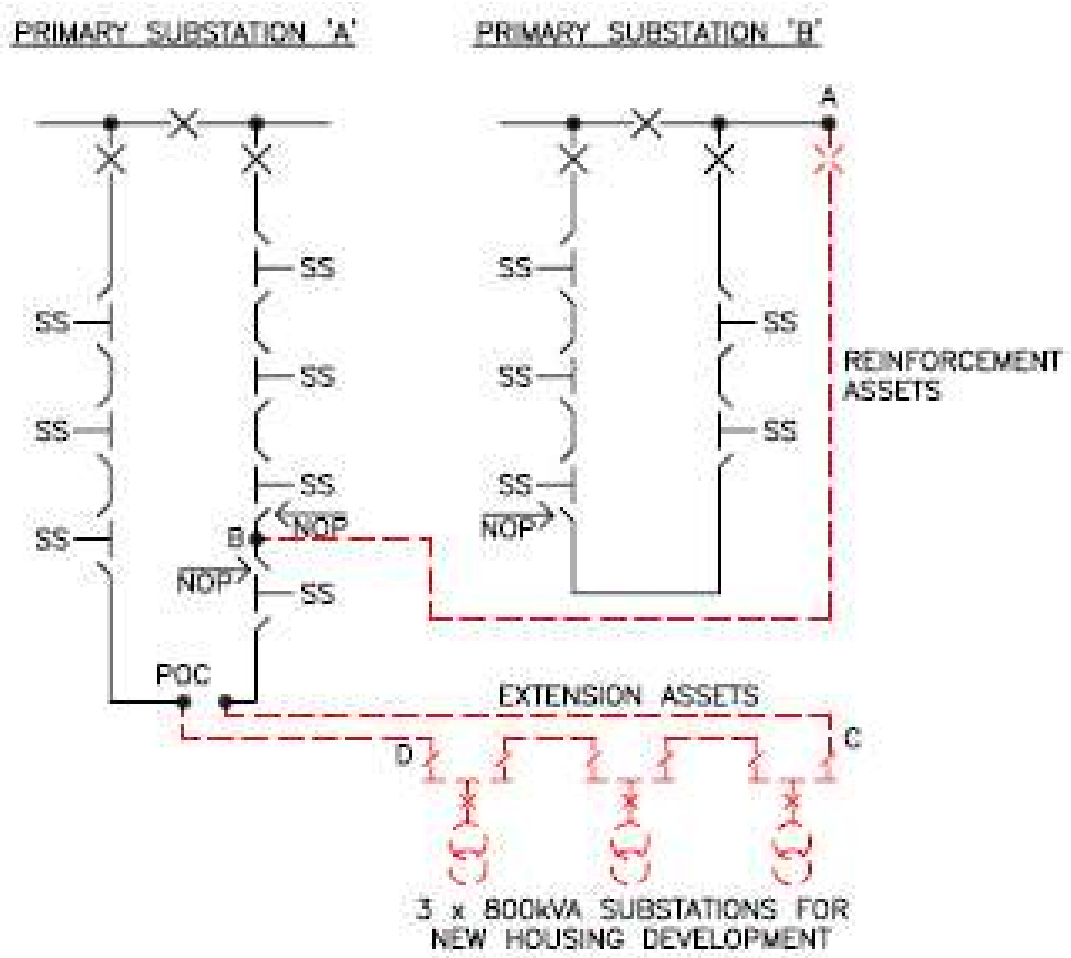

Reinforcement:

The RSN for the Reinforcement

For the Reinforcement CAF the RSN is considered to be the secure three feeder 11kV network comprising the two feeders from Primary Substation A and the new feeder from Primary Substation B as this new feeder is capable of feeding either of the existing circuits. The numerator in the CAF calculation is based upon the Required Capacity of the new development, i.e. 2MVA. In this case, the New Network Capacity (under secure N -1 conditions) following the Reinforcement works is equal to (3 – 1) x 7.7MVA = 15.4MVA

Fault Level CAF calculation: This Scheme does not have any significant Fault Level contribution to the existing shared use distribution network and Fault Level CAF is therefore not applicable here.

The Connection Charge for this Scheme is calculated as follows:

Reinforcement:

	Cost	**Apportionment**	**Customer Contribution**
Non Contestable Work			
1300m of 11kV Cable	£130,000	2/15.4 x 100% = 13.0%	£16,883
11kV Circuit Breaker at Primary Substation B	£45,000	As above	£5,844
11kV jointing at Point B	£3,000	As above	£390
Total Reinforcement Cost	£178,000		**£23,117**

Extension Assets:

	Cost	**Apportionment**	**Customer Contribution**
Contestable Work			
1200m of 11kV Cable	£120,000	n/a	£120,000
3 by 800kVA distribution substations	£150,000	n/a	£150,000
On site LV mains and services	£330,000	n/a	£330,000
Non-Contestable Work			
2 by 11kV closing joints	£5,000	n/a	£5,000
Total Extension Asset Cost	£605,000		**£605,000**
CIC Charges			£3,500

Total Connection Charge = £23,117 + £605, 000 = £628,117

Example 8B: Connection of housing development

This example demonstrates the application of Exception 5 (paragraph 1.21)

In this variation of the previous Example the site is closer to Primary Substation B and the Minimum Scheme is to connect the new load to the new 11kV feeder from Primary Substation B and provide interconnection to an existing secure 11kV feeder from Primary Substation A. In this Example 600m of 11kV cable on site (between Points C and D) is required to provide connectivity within the development and is considered to be Extension Assets.

The figure below shows the proposed network.

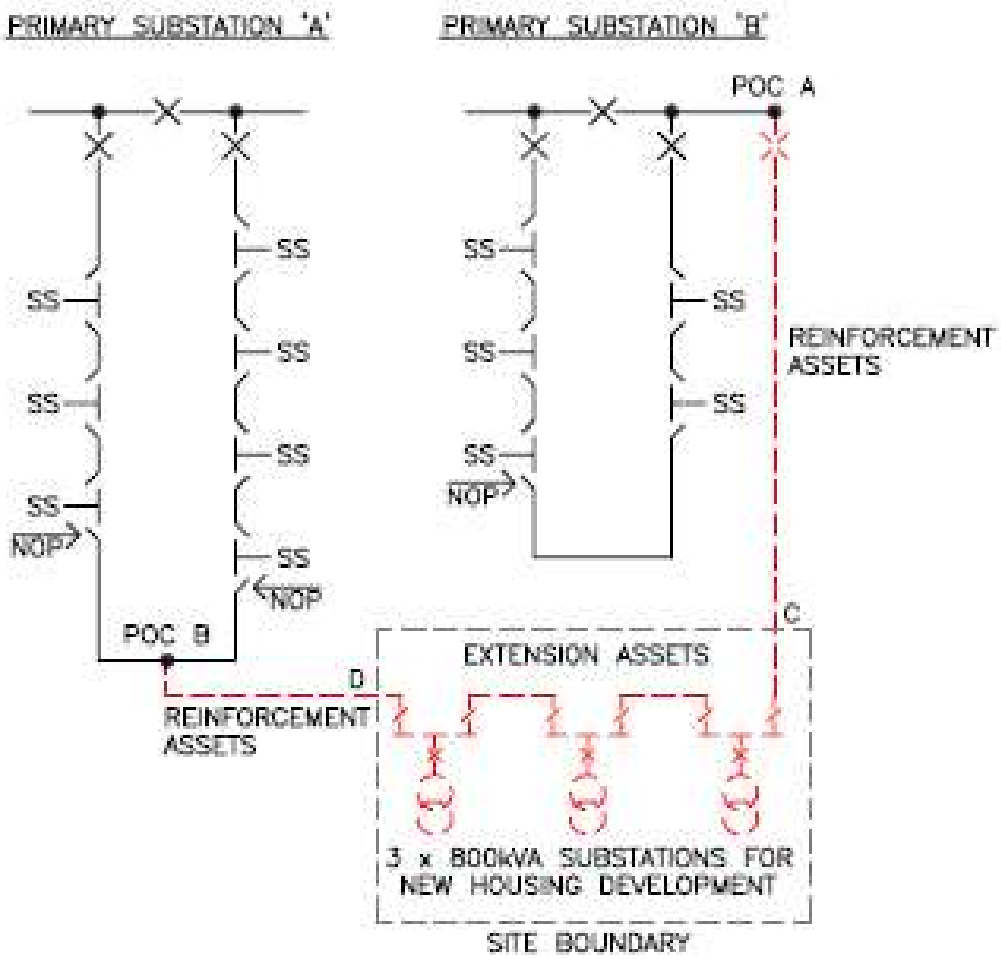

The assets connecting POC A and POC B add capacity to the existing network, so would normally be treated as Reinforcement. These comprise –

- the assets between the Customer's site and POC A (POC A to point C);
- the assets between the Customer's site and POC B (POC B to point D); and
- the 600m of 11kV cable on site.

The three 800kVA substations are not considered to provide connection between POC A and POC B. The 600m of 11kV cable on site is additional network length to provide connectivity between multiple exit points on the Customer's site. Therefore, Exception 5 applies and the 600m of 11kV cable on site will be treated as Extension Assets and its costs will charged in full to the customer. No exceptions apply to the assets between POC A and point C and POC B and point D. Therefore, these will be treated as Reinforcement and their costs will be apportioned.

Reinforcement:

The RSN for the Reinforcement

The RSN is considered to be the secure three feeder 11kV network comprising the two feeders from Primary Substation A and the new feeder from Primary Substation B. As in the above example the numerator in the CAF calculation is based upon the Required Capacity of the new development, i.e. 2MVA. In this case, however the work to provide the connection will increase the capacity of the existing shared use Distribution System from 7.7MVA to 15.4MVA. The New Network Capacity (under secure N -1 conditions) following the Reinforcement works is equal to (3 – 1) x 7.7MVA = 15.4MVA

Fault Level CAF calculation: This Scheme does not have any significant Fault Level contribution to the existing shared use Distribution System and Fault Level CAF is therefore not applicable here.

The Connection Charge for this Scheme is calculated as follows:

Reinforcement:

	Cost	**Apportionment**	**Customer Contribution**
Non Contestable Works			
1 new 11kV Circuit Breaker tailed out from primary substation B	£45,000	2/15.4 x 100% = 13.0%	£5,844
2 by 11kV closing joints	£5,000	As above	£649
700m of 11kV cable from primary B to site	£70,000	As above	£9,091
600m of 11kV cable from POC B to site	£60,000	As above	£7,792
Total Reinforcement Cost	£180,000		**£23,376**

Extension Assets:

	Cost	**Apportionment**	**Customer Contribution**
Contestable Works			
600m of 11kV cable on site	£60,000	n/a	£60,000
3 by 800KVA unit Substation	£150,000	n/a	£150,000
On site LV mains and services	£330,000	n/a	£330,000
Non-Contestable Work			
2 by 11kV cable box terminations	£2,000	n/a	£2,000
Total Extension Asset Cost	£542,000		**£542,000**
CIC Charges			£3,500

Total Connection Charge = £23,376 + £542, 000 = £565,376

Example 8C: Connection of housing development with remote network Reinforcement

This further variation shows the arrangements that will apply where it is necessary to reinforce a different part of the Distribution System so that existing demand may be transferred in order to release capacity for the new connection.

A new housing development has a Required Capacity of 2MVA to serve 900 plots. The local 11kV feeder has a network capacity of 7.7MVA based upon the limitation of the existing 400 Amp circuit breakers at Primary Substation A. The existing load on the circuit is 7.6MVA. It is therefore not possible to connect the new load to this circuit without Reinforcement works.

It is proposed to reinforce an adjacent network so that two existing substations may be transferred on to it, in order to release capacity so that the new connections can be made. Primary Substation B has sufficient spare capacity to accommodate the two existing substations. A new circuit breaker is to be installed at Primary Substation B and a new 11kV feeder (also rated at 7.7MVA) is to be installed between points A – B and between points E – F for connection to the local 11kV circuit at point F. The existing circuit will be cut at point BE so that the new joints can be made. This will convert the Primary Substation B network from a two-feeder to a three-feeder network. The total new cable length between points A – B and points E - F is 500m. The network will be reconfigured by the installation of two short straps C – D and G - H in order to maintain connectivity.

This Reinforcement will allow a POC to be taken from the local 11kV circuit to supply the new development. The newly installed cable to connect the development from the POC is 1200m long. Three 800kVA distribution substations are to be established onsite. The above work represents the Minimum Scheme to provide connections to the new site.

Original network:

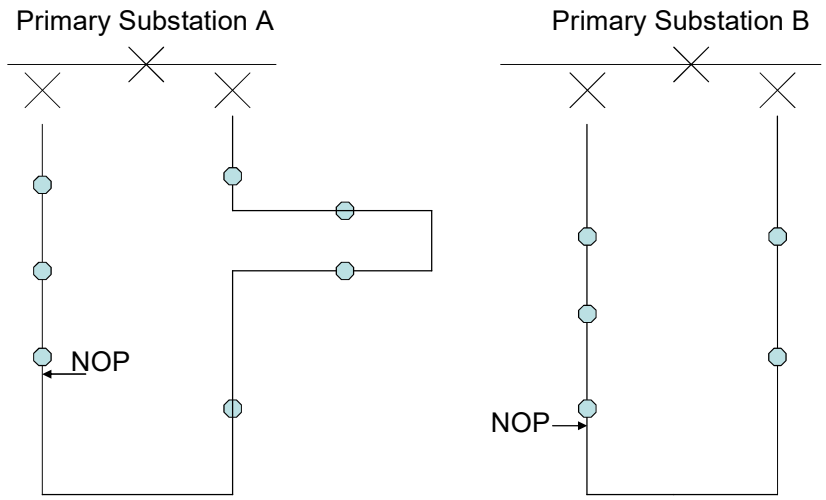

<u>Proposed network:</u>

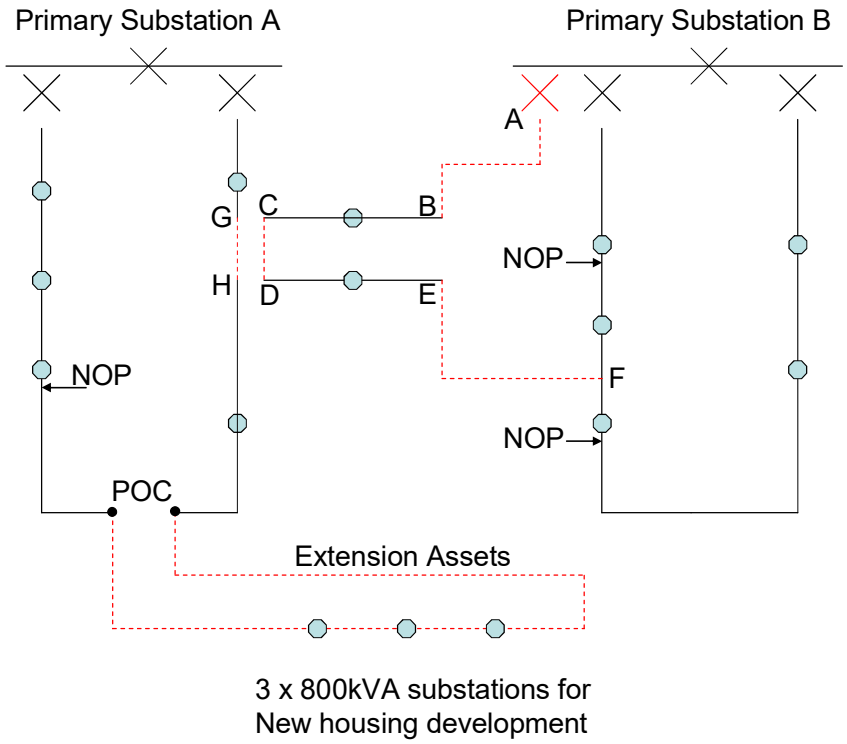

Reinforcement:

The RSN for the Reinforcement

For the Reinforcement CAF the RSN is the three-feeder network from Primary Substation B which supplies the loads on the existing two feeders from Primary Substation B as well as the loads at points C and D transferred from the network from the Primary Substation A. The Relevant Section of Network does not supply the new development in this case. The numerator in the CAF calculation is based upon the Required Capacity of the new development, i.e. 2MVA. In this case, the New Network Capacity (under N-1 conditions) following the Reinforcement works is equal to (3 – 1) x 7.7MVA = 15.4MVA.

Fault Level CAF calculation: This Scheme does not have any significant Fault Level contribution to the existing shared use distribution network and Fault Level CAF is therefore not applicable here.

The Connection Charge for this Scheme is calculated as follows:

Reinforcement:

	Cost	Apportionment	Customer Contribution
Non Contestable Work			
500m of 11kV cable: A-B, C-D, E-F	£50,000	2/15.4 x 100% = 13%	£6,500
11kV Circuit Breaker at Primary Substation B	£45,000	As above	£5,844
11kV jointing at Points A,B,C,D,E,F	£10,000	As above	£1,300
Total reinforcement cost	£105,000		£13,644

Extension Assets:

	Cost	Apportionment	Customer Contribution
Contestable Work			
1200m of 11kV cable inc. strap at G - H	£120,000	n/a	£120,000
3 by 800kVA distribution substations	£150,000	n/a	£150,000
On site LV mains and services	£330,000	n/a	£330,000
Non Contestable Work			
4 by 11kV closing joints at POC and at points G,H	£10,000	n/a	£10,000
Total extension asset cost	£610,000		£610,000
CiC charges			£3,500

Total Connection Charge = £13,644 + £610,000 = £623,644

Example 8D: Connection of housing development with load transfer

An additional variation shows the arrangements that will apply where it is necessary to reconfigure the Distribution System so that existing demand may be transferred in order to release capacity for the new connection.

A new housing development has a Required Capacity of 2MVA to serve 900 plots. The local 11kV feeder has a network capacity of 7.7MVA based upon the limitation of the existing 400 Amp circuit breakers at Primary Substation A. The existing load on the circuit is 7.6MVA. It is therefore not possible to connect the new load to this circuit as presently configured.

It is proposed to reconfigure the Distribution System such that two existing substations may be transferred on to an adjacent network, in order to release capacity so that the new connections can be made. Primary Substation B has sufficient spare capacity to accommodate the two existing substations. New cables are to be installed between points A – B and between points E – F. The existing circuit will be cut at point BE so that the new joints can be made. The total new cable length between points A – B and points E - F is 100m. The network will be reconfigured by the installation of two short straps C – D and G - H in order to maintain connectivity.

This transfer of existing demand will allow a POC to be taken from the local 11kV circuit to supply the new development. The newly installed cable to connect the development from the POC is 1200m long. Three 800kVA distribution substations are to be established onsite. The above work represents the Minimum Scheme to provide connections to the new site.

Original network:

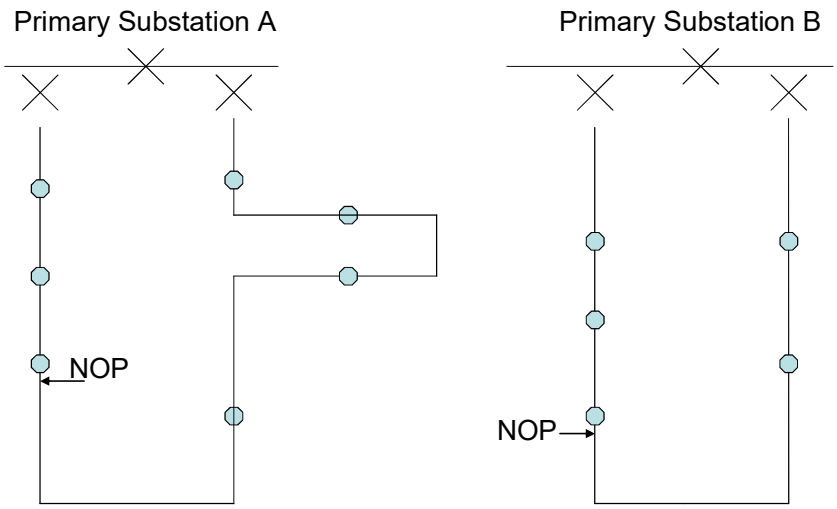

Proposed network:

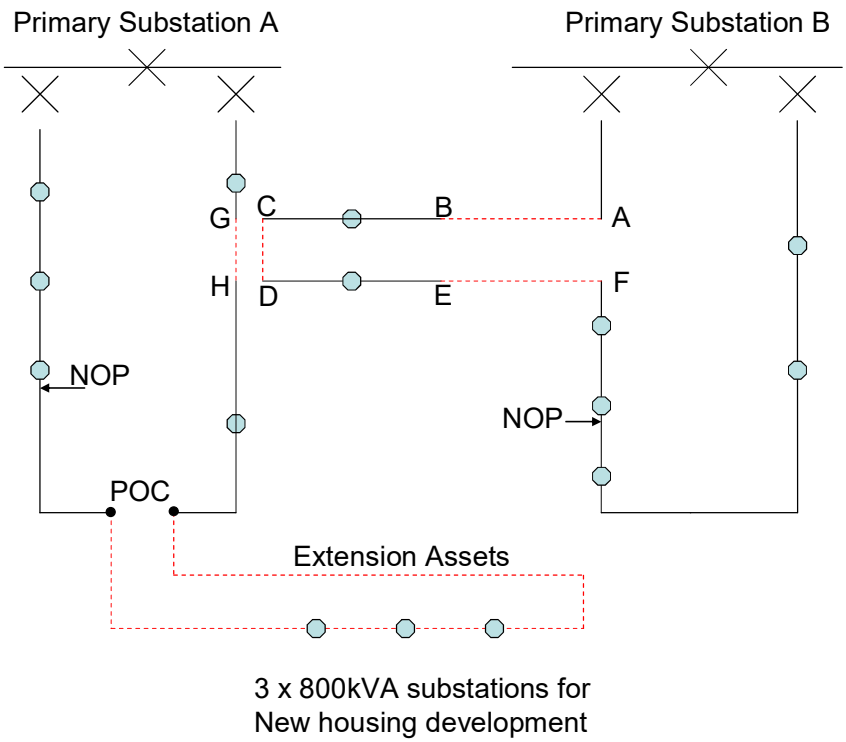

The Connection Charge for this Scheme is calculated as follows:

Extension Assets:

	Cost	Apportionment	Customer Contribution
Contestable Work			
1300m of 11kV cable including A-B, C-D, E-F, G-H and from POC to the development	£120,000	n/a	£120,000
3 by 800kVA distribution substations	£150,000	n/a	£150,000
On site LV mains and services	£330,000	n/a	£330,000
Non Contestable Work			
10 by 11kV closing joints at POC and at points A,B,C,D,E,F,G,H	£25,000	n/a	£25,000
Total extension asset cost	£625,000		£625,000
CiC charges			£3,500

Total Connection Charge = £625,000

Example 9: Minimum Scheme

A Customer requests a new 100kVA connection. There is sufficient spare capacity on the adjacent LV main but the existing 300kVA transformer at the local 11kV/LV substation is fully loaded.

(a) The Minimum Scheme is to provide a new service cable and to replace the 300kVA transformer at the local substation with a 500kVA transformer.

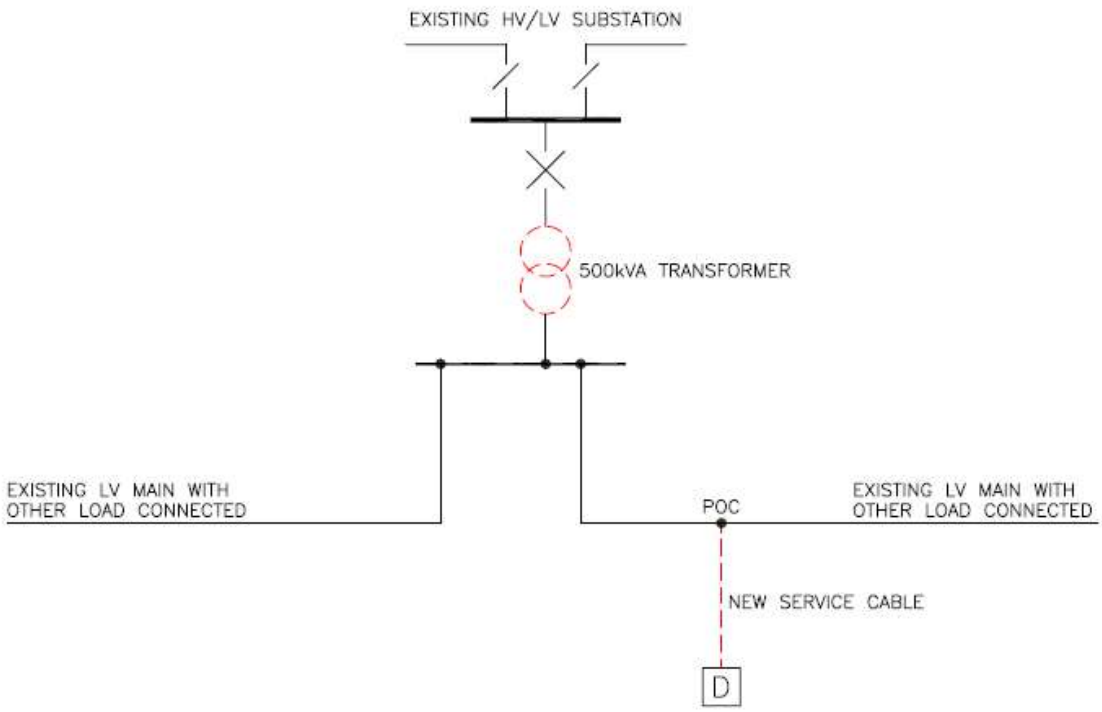

Reinforcement:

<u>The RSN for the Reinforcement is the HV/LV transformer</u>

Security CAF calculation: the numerator in the CAF calculation is based upon the Required Capacity of the Customer, i.e. 100kVA. The denominator is based on the New Network Capacity following Reinforcement, i.e. 500kVA.

Fault Level CAF calculation: This scheme does not have any significant Fault Level contribution to the existing shared use distribution network and Fault Level CAF is therefore not applicable here.

The Connection Charge for this Scheme is calculated as follows:

Reinforcement:

	Cost	**Apportionment**	**Customer Contribution**
Non Contestable Work			
Replacement 500kVA transformer	£10,000	100/500 x 100% = 20.0%	£2,000
Total Reinforcement Cost	£10,000		**£2,000**

Extension Assets:

	Cost	**Apportionment**	**Customer Contribution**
Contestable Work			
Provision and installation of LV service cable	£1,500	n/a	£1,500
Non-Contestable Work			
LV joints to network	£500	n/a	£500
Total Extension Asset Cost	£2,000		**£2,000**
CIC Charges			£200

Total Connection Charge = £2,000 + £2,000 = £4,000

(b) However the DNO wishes to carry out an Enhanced Scheme to install a 1000kVA transformer at the local substation and install a new LV main that will connect to and pick up load from an adjacent LV network.

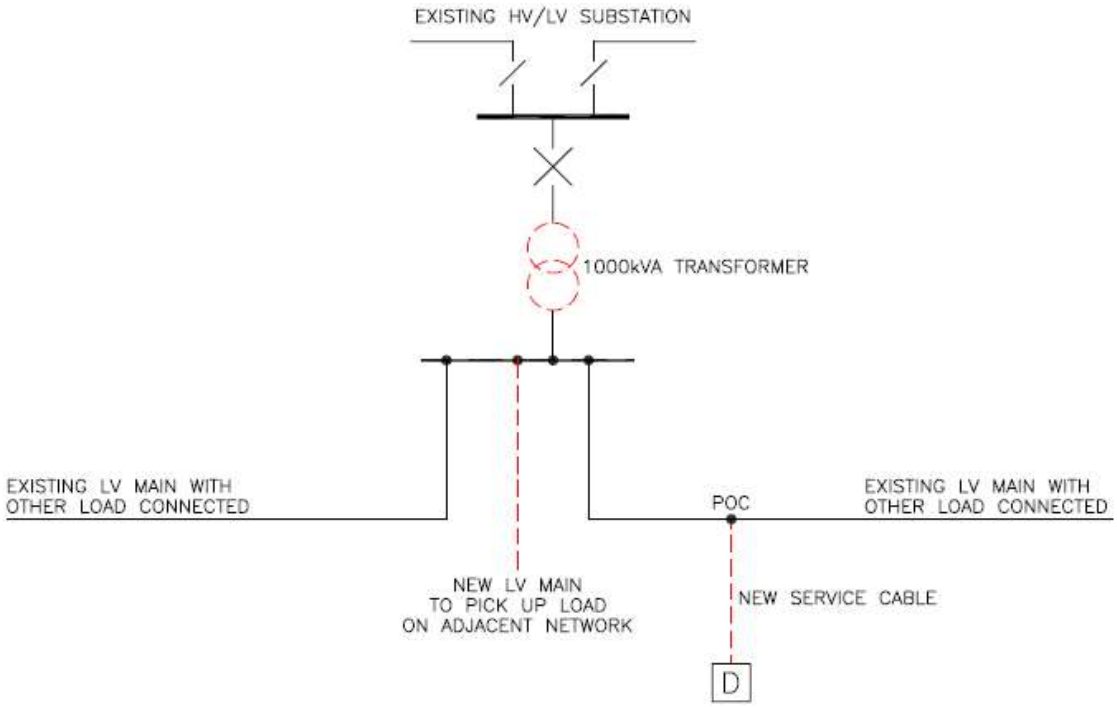

<u>The RSN for the Reinforcement is the HV/LV transformer</u>

Security CAF calculation: the numerator in the CAF calculation is based upon the Required Capacity of the Customer, i.e. 100kVA. The denominator is based on the New Network Capacity following Reinforcement, i.e. 1000kVA.

Fault Level CAF calculation: This scheme does not have any significant Fault Level contribution to the existing shared use distribution network and Fault Level CAF is therefore not applicable here.

Reinforcement:

	Cost	**Apportionment**	**Customer Contribution**
Non Contestable Work			
Replacement 1000kVA transformer	£15,000	100/1000 x 100% = 10.0%	£1,500
Total Reinforcement Cost	£15,000		**£1,500**

Extension Assets:

	Cost	**Apportionment**	**Customer Contribution**
Contestable Work			
Provision and installation of LV service cable	£1,500	n/a	£1,500
Non-Contestable Work			
LV joints to network	£500	n/a	£500
Total Extension Asset Cost	£2,000		**£2,000**
CIC Charges			£200

Total Connection Charge = £1,500 + £2,000 = £3,500

The cost of the new LV mains will be met by us and does not form part of the Connection Charge.

In this instance the Connection Charge resulting from the Enhanced Scheme is lower than that resulting from the Minimum Scheme and the Customer would benefit from the lower Connection Charge and pay £3,500 (paragraph 1.5 refers).

(c) If, however under the proposed DNO Scheme the transformer cost was £25,000 then the resultant Connection Charge would be considered as follows:

Reinforcement:

	Cost	**Apportionment**	**Customer Contribution**
Non Contestable Work			
Replacement 1000kVA transformer	£25,000	100/1000 x 100% = 10.0%	£2,500
Total Reinforcement Cost	£25,000		**£2,500**

Extension Assets:

	Cost	**Apportionment**	**Customer Contribution**
Contestable Work			
Provision and installation of LV service cable	£1,500	n/a	£1,500
Non-Contestable Work			
LV joints to network	£500	n/a	£500
Total Extension Asset Cost	£2,000		**£2,000**
CIC Charges			£200

Total Connection Charge = £2,500 + £2,000 = £4,500 but in this instance the Customer contribution will be capped at the contribution that would have been due under the Minimum Scheme, i.e. £4,000 (paragraph 1.5 refers).

Example 10: A new connection application for commercial Premises on a meshed 11kV distribution system requiring Reinforcement.

A Customer requests a new connection to a commercial premise requiring a 4MVA HV metered connection. The local 11kV network is of a meshed design whereby the 11kV network is supplied from single 33/11kV primary transformers via 33kV radial feeds as shown below.

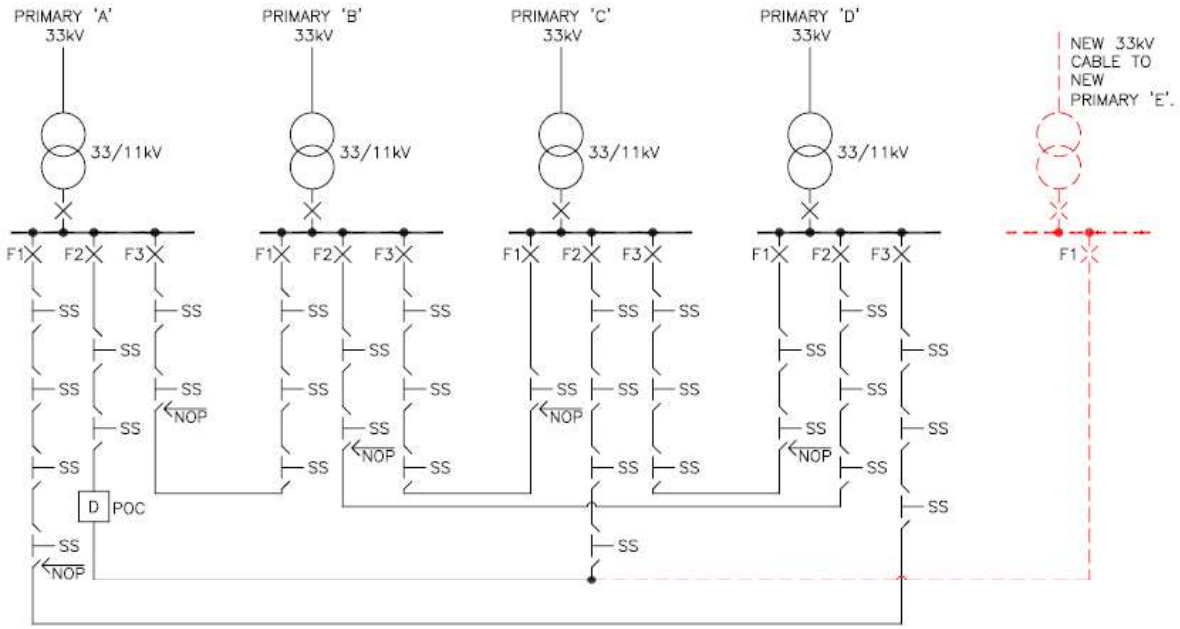

The existing network consists of four 10MVA primary transformer substations and associated 11kV switchgear. A new connection of 4MVA has been requested in the vicinity of F2 from Primary A.

The existing relevant primary transformer group is loaded to its secure capacity so the primary transformer group will require Reinforcement to enable the new connection to progress.

To provide the Required Capacity, the 11kV network will be reinforced by the installation of a new primary substation connected to the nearest 33kV circuit. The new primary substation (Primary E) will contain a 10MVA transformer, associated 11kV switchgear and a new 11kV (7.7 MVA) cable installed to interconnect into the existing 11kV network (from F2 at Primary A to F2 at Primary C).

Reinforcement:

Security CAF calculation: In this example there are two different security CAFs applied. This is because the RSN is different when considering the new network capacity in respect of different elements of the Reinforcement works.

The RSN for the Reinforcement comprising the 11kV Cable Works:

For the 11kV cable assets the RSN is considered to be the secure three feeder 11kV network from Primary A (Feeder 2), Primary C (Feeder 2) and Primary E (Feeder 1). In this case the New Network Capacity (under secure N -1 conditions) following the Reinforcement works is equal to

(3 – 1) x 7.7MVA = 15.4MVA

This is due to the fact that following the Reinforcement work both of the existing circuits; Primary A, Feeder 2 and Primary C, Feeder 2 can be loaded to their full capacity and will have the newly installed clean feeder from Primary E to act as a back feed to meet the requirements of P2/6.

The security CAF for these assets will therefore be 4/15.4 X 100% = 26.0%

The RSN for the Reinforcement comprising the Primary substation assets:

In this instance the RSN comprises Primary A, C and E within the group that can be used to supply the customer. The New Network Capacity of this RSN (under secure N -1 conditions) following the Reinforcement works is equal to 17.7MVA. (10MVA from either Primary A or Primary C and 7.7MVA from Primary E which is limited by the single 11kV cable connected to it.

The security CAF for these assets will therefore be 4/17.7 X 100% = 22.6%

Fault Level CAF calculation: This Scheme does not have any significant Fault Level contribution to the existing shared use distribution network and Fault Level CAF is therefore not applicable here.

The Connection Charge for this Scheme is calculated as follows:

Reinforcement:

	Cost	**Apportionment**	**Customer Contribution**
Non Contestable Works			
500m 11kV cable from new primary substation E	£50,000	4/15.4 X 100% = 26.0%	£12,987
1 by 11kV closing joints	£4,000	As above	£1,039
11kV switchgear at new Primary E	£80,000	4/17.7 X 100% = 22.6%	£18,079
Primary transformer	£600,000	As above	£135,593
2.5km of 33kV cable installation	£500,000	As above	£112,994
33kV Circuit Breaker	£70,000	As above	£15,819
33kV Terminations	£10,000	As above	£2,260
Total Reinforcement Cost	£1,314,000		**£298,771**

Extension Assets:

	Cost	**Apportionment**	**Customer Contribution**
Contestable Work			
HV ring main unit	£20,000	n/a	£20,000
HV metering unit	£10,000	n/a	£10,000
500m of 11kV cable	£100,000	n/a	£100,000
Non-Contestable Work			
2 by 11kV closing joints	£5,000	n/a	£5,000
Total Extension Asset Cost	£135,000		**£135,000**
CIC Charges			£3,500

Total Customer Contribution = £298,771 + £135,000 = £433,771

Example 11: Non-Secure Connection With Non-Secure Reinforcement

A Customer wishes to connect a new generator with a Required Capacity for export purposes of 5 MVA. The connection of the generator requires the installation of 1,000m of 33kV cable and a 33kV metering circuit breaker, these being Extension Assets. An existing spare circuit breaker at the substation is utilised which, in this case, is not chargeable to the Customer.

As there is insufficient capacity in the existing 24.0 MVA thermal capacity rated 33kV feeder for the new generation due to the presence of existing generation, the connection also requires the installation of a new 33kV feeder, which also has a thermal capacity of 24.0 MVA, as Reinforcement. This is the Minimum Scheme as it is cheaper to do this, to the extent as shown in the diagram below, rather than upgrade the existing 33kV feeder to the same point along it.

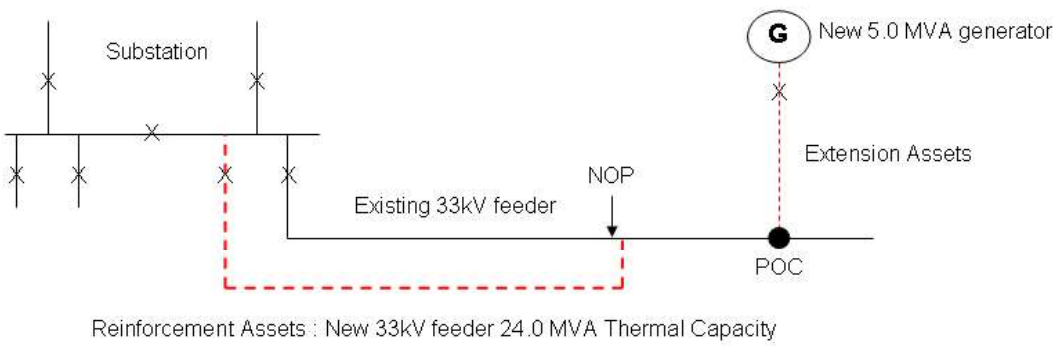

Reinforcement:

The numerator in the CAF calculation is the Required Capacity of the new generator, which is 5.0 MVA.

The Relevant Section of Network in this case is the existing 33kV feeder and the new 33kV feeder. The New Network Capacity is calculated using the non-secure capacity and is therefore the sum of the thermal capacities of the two feeders, which is 48.0 MVA. This is the denominator in the CAF calculation.

The Connection Charge for this Scheme is calculated as follows:

Reinforcement:

	Cost	**Apportionment**	**Customer Contribution**
Contestable Work			
Installation of new 33kV feeder	£ 500,000	5.0 / 48.0 x 100% = 10.4%	£ 52,000
Total Reinforcement Cost	£ 500,000		**£ 52,000**

Extension Assets:

	Cost	**Apportionment**	**Customer Contribution**
Contestable Work			
Installation of 1,000m 33kV cable	£ 200,000	n/a	£ 200,000
Installation of 33kV metering circuit breaker	£ 70,000	n/a	£ 70,000
Non-Contestable Work			
Joints to 33kV network	£ 10,000	n/a	£ 10,000
Total Extension Asset Cost	£ 280,000		**£ 280,000**
CIC Charges			£ 3,500

Total Connection Charge = £ 52,000 + £ 280,000 = £ 332,000

Example 12: Non-Secure Connection With Secure Reinforcement

A Customer requests a new connection to industrial premises requiring an 8 MVA metered demand connection. In this case, the Customer has exercised their option to request non-secure Extension Assets in the provision of the connection.

The existing network comprises a substation which has 2 x 15 MVA transformers. The Minimum Scheme to provide the connection is to install 750m of 11 kV cable from the substation to the industrial premises, as Extension Assets. As there is insufficient capacity available from the existing 2 x 15 MVA transformers to provide the new connection, it will be necessary to upgrade the transformers to 2 x 24 MVA units. Both transformers at the substation must be upgraded to ensure the 11kV network load can be maintained during planned or unplanned outages of one of the transformers. Although the Customer wishes to accept a non-secure connection, the substation must provide secure capacity to its Group Demand (which includes the Customer) to comply with the requirements of Engineering Recommendation P2/6. As the Extension Assets will be provided solely for the Customer, these can be provided on the basis of a single circuit to provide a non-secure connection, at the Customer's request.

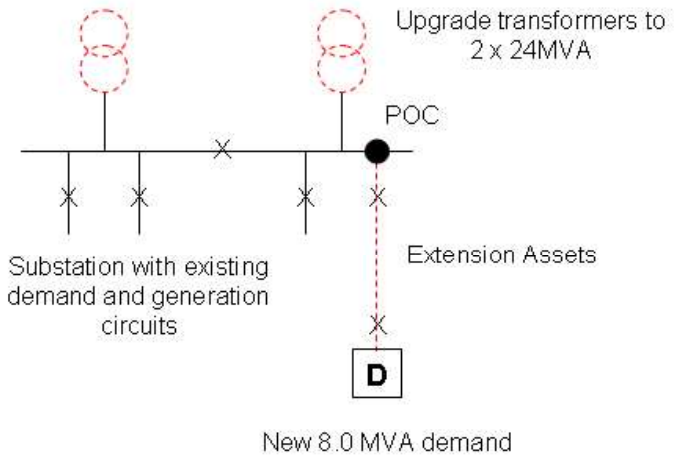

Reinforcement:

The numerator in the CAF calculation is the Required Capacity of the new demand, which is 8.0 MVA.

The Relevant Section of Network in this case is the transformers at the substation. The New Network Capacity is the secure capacity of the transformers, which is 24 MVA. This is the denominator in the CAF calculation.

The Connection Charge for this Scheme is calculated as follows:

Reinforcement:

	Cost	**Apportionment**	**Customer Contribution**
Non-Contestable Work			
Installation of 2 x 24 MVA 33/11 kV transformers	£ 1,500,000	8.0 / 24.0 x 100% = 33.3%	£ 500,000
Total Reinforcement Cost	£ 1,500,000		**£ 500,000**

Extension Assets:

	Cost	**Apportionment**	**Customer Contribution**
Contestable Work			
Installation of 750m 11kV cable	£ 75,000	n/a	£ 75,000
Installation of 11kV metering circuit breaker	£ 50,000	n/a	£ 50,000
Non-Contestable Work			
Joints to 11kV network	£ 5,000	n/a	£ 5,000
Total Extension Asset Cost	£ 130,000		**£ 130,000**
CIC Charges			£ 1,100

Total Connection Charge = £ 500,000 + £ 130,000 = £ 630,000

Example 13: Secure Connection With Secure Reinforcement

A Customer requests a new connection to commercial premises which has a Required Capacity of 2.5 MVA. The connection is to be provided on a secure basis and the Minimum Scheme is as shown.

On the existing network, only Feeder B1 has sufficient thermal capacity available to accommodate the additional demand. To comply with demand security requirements, it is necessary to install a new feeder (Feeder A1) with a thermal capacity of 7 MVA, as a Reinforcement of the network.

The Extension Assets in this case are two 11 kV cable circuits of 25m each.

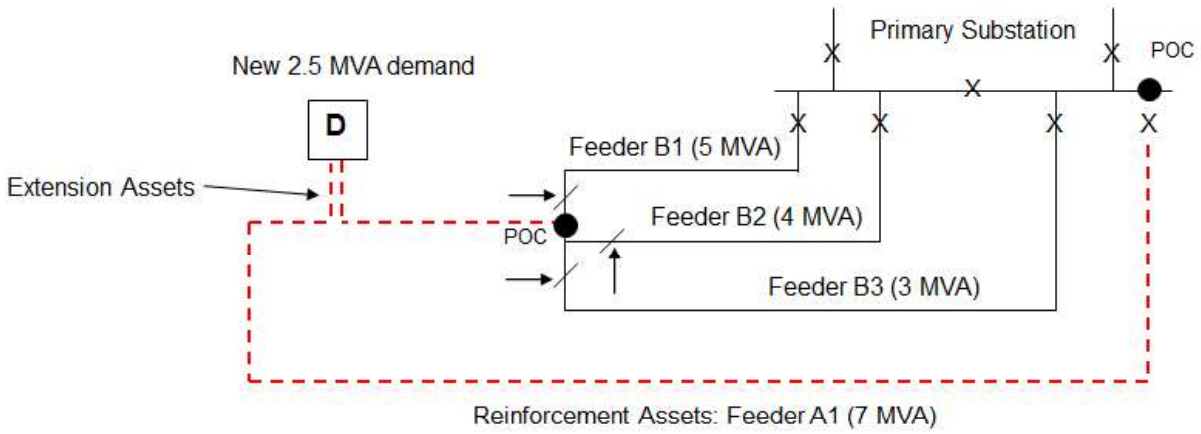

Reinforcement:

If sufficient capacity had been available in the existing network, only two of the existing feeders would have been required to provide the required security. To determine which two feeders are relevant, the feeders with the closest ratings to the new feeder are considered.

In this case, Feeders B1 (5 MVA) and B2 (4 MVA) have the closest ratings to the new Feeder A1 (7 MVA). Therefore, the Relevant Section of Network is (B1 and B2) and A1. Note that the RSN will at most be limited to a three-feeder ring.

The New Network Capacity is determined by applying (N – 1) security to the three-feeder RSN. This gives a secure NNC of (5 MVA + 4 MVA) = 9 MVA. This recognises the possible loss of feeder A1 and supply through Feeder B1.

Therefore, the numerator in the CAF calculation is the Required Capacity of 2.5 MVA and the denominator is the New Network Capacity of 9.0 MVA.

The Connection Charge for this Scheme is calculated as follows:

Reinforcement:

	Cost	**Apportionment**	**Customer Contribution**
Contestable Work			
Installation of new 11kV feeder	£ 250,000	2.5 / 9.0 x 100% = 27.8%	£ 69,500
Total Reinforcement Cost	£ 250,000		**£ 69,500**

Extension Assets:

	Cost	**Apportionment**	**Customer Contribution**
Contestable Work			
Installation of 2 x 25m 11kV cable	£ 10,000	n/a	£ 10,000
Installation of 2 x 11kV metering circuit breakers	£ 100,000	n/a	£ 100,000
Non-Contestable Work			
Joints to 11kV network	£ 5,000	n/a	£ 5,000
Total Extension Asset Cost	£115,000		**£115,000**
CIC Charges			£ 1,100

Total Connection Charge = £ 69,500 + £ 115,000 = £ 184,500

Example 14: New 25kVA Generation Connection, Voltage Rise Triggered Reinforcement

An existing Customer wishes to connect a new generator with a Required Capacity for export of 25kVA. The Minimum Scheme for connection of the generator requires the local 25kVA pole mounted transformer to be reinforced with a 100kVA split phase transformer in order to keep voltage rise within acceptable limits. A new 95mm^2 service cable is to be installed to the premises.

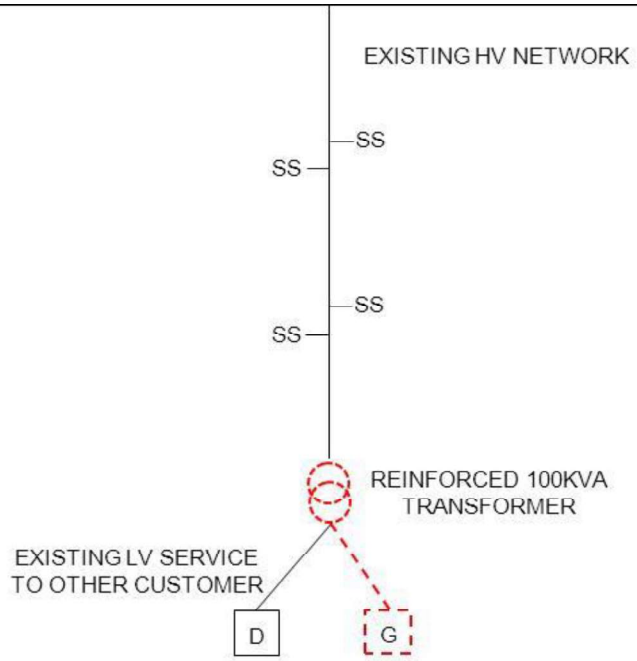

Reinforcement:

<u>The RSN for the Reinforcement is the HV/LV transformer.</u>

Security CAF calculation: the numerator in the CAF calculation is the Required Capacity of the Customer, i.e. 25kVA. The denominator is the New Network Capacity following Reinforcement, this being the maximum generation output that could be connected whilst keeping the voltage rise within acceptable limits, i.e. 40kVA in this case.

Fault Level CAF calculation: this scheme does not have any significant Fault Level contribution to the existing shared use distribution network and Fault Level CAF is therefore not applicable here.

The Connection Charge for this Scheme is calculated as follows:

Reinforcement:

	Cost	Apportionment	Customer Contribution
Non Contestable Work			
Replacement 100kVA transformer	£15,000	25/40 x 100% = 62.5%	£9,375
Total Reinforcement Cost	£15,000		**£9,375**

Extension Assets:

	Cost	Apportionment	Customer Contribution
Contestable Work			
Provision and installation of LV service cable	£1,500	n/a	£1,500
Non-Contestable Work			
LV joints to network	£500	n/a	£500
Total Extension Asset Cost	£2,000		**£2,000**
CIC Charges			£200

Total Connection Charge = £9,375 + £2,000 = £11,375

(Note – for simplicity, the high-cost generation project threshold of £200/kW has been ignored in this example, but would apply in respect of the costs illustrated. Refer to paragraph 1.15.)

Example 15: New 2MVA Generation Connection, Voltage Rise Triggered Reinforcement

A Customer wishes to connect a new generator with a Required Capacity for export purposes of 2MVA. The local 11kV feeder has a large amount of generation already connected and will need to be reinforced in order to keep voltage rise within acceptable limits. The Minimum Scheme requires Reinforcement of the existing 185mm^2 11kV underground cable with 300mm^2 underground cable and installation of a new substation for connection of the 2MVA export capacity. The total length of the reinforced cable is 2km. The thermal rating of the 300mm^2 underground cable is 8MVA. The 11kV underground cable on the other side of the normal open point is already 300mm^2 and does not require to be reinforced.

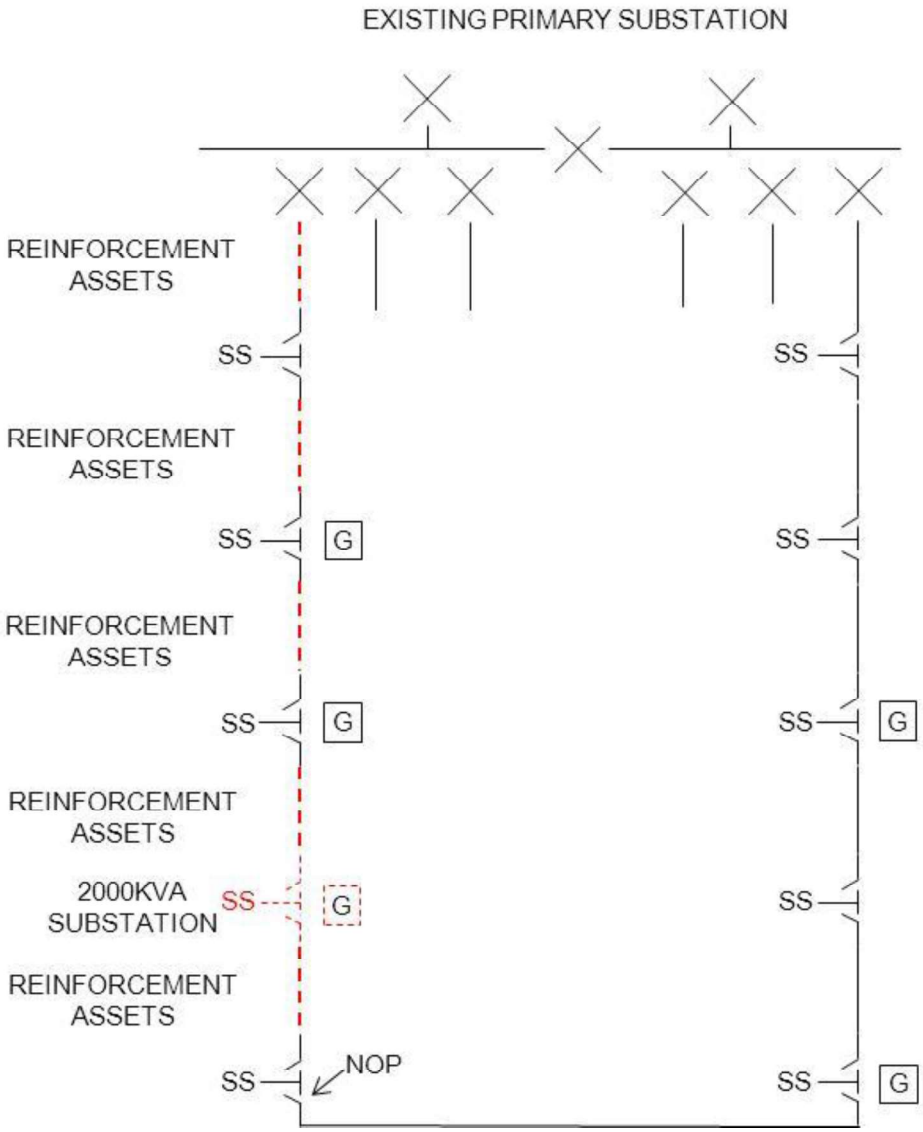

Reinforcement:

The RSN for the Reinforcement is the 11kV feeder.

Security CAF calculation: the numerator in the CAF calculation is the Required Capacity of the Customer, i.e. 2MVA. The denominator is the New Network Capacity following Reinforcement, this being the maximum generation that could be connected whilst keeping the voltage rise within acceptable limits, i.e. 6MVA in this case.

Fault Level CAF calculation: this scheme does not have any significant Fault Level contribution to the existing shared use distribution network and Fault Level CAF is therefore not applicable here.

The Connection Charge for this Scheme is calculated as follows:

Reinforcement:

	Cost	**Apportionment**	**Customer Contribution**
Non Contestable Work			
2km 300mm 11kV cable	£200,000	2/6 x 100% = 33.3%	£66,666
Total Reinforcement Cost	£200,000		**£66,666**

Extension Assets:

	Cost	**Apportionment**	**Customer Contribution**
Contestable Work			
2MVA 11kV substation	£40,000	n/a	£40,000
Non-Contestable Work			
2 by 11kV closing joints	£5,000	n/a	£5,000
Total Extension Asset Cost	£45,000		**£45,000**
CIC Charges			£200

Total Connection Charge = £66,666 + £45,000 = £111,666

Example 16: New 250kVA Generation Connection, Voltage Rise Triggered Reinforcement

A Customer wishes to connect a new generator with a Required Capacity for export of 250kVA. The Minimum Scheme for connection of the generator requires the local 11kV overhead line to be reinforced with 100mm^2 conductor over part of its length in order to keep voltage rise within acceptable limits. The thermal capacity of the 100mm^2 overhead line is 5MVA. The thermal capacity of the original 50mm^2 overhead line is 3MVA. A new 315kVA ground mounted substation requires to be installed at the premises. The overhead line is 1km in length but only 500m is required to be reinforced in order to keep voltage rise within acceptable limits.

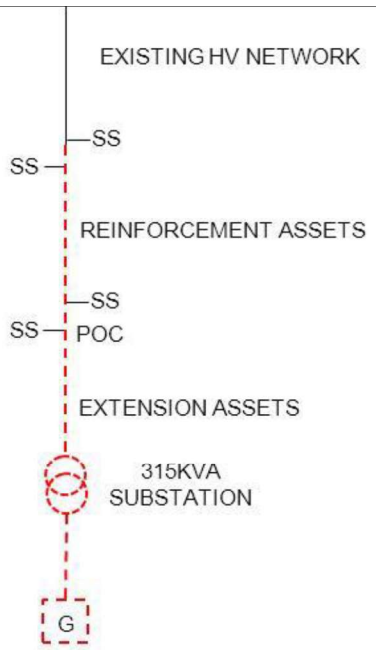

Reinforcement:

<u>The RSN for the Reinforcement is the 11kV overhead line.</u>

Security CAF calculation: the numerator in the CAF calculation is the Required Capacity of the Customer, i.e. 250kVA. The denominator is the New Network Capacity following Reinforcement, this being the maximum generation that could be connected whilst keeping the voltage rise within acceptable limits. As the length of overhead line to be reinforced has been determined to accommodate the 250kVA requirement only, then this is also 250kVA in this case.

Fault Level CAF calculation: this scheme does not have any significant Fault Level contribution to the existing shared use distribution network and Fault Level CAF is therefore not applicable here.

The Connection Charge for this Scheme is calculated as follows:

Reinforcement:

	Cost	**Apportionment**	**Customer Contribution**
Non Contestable Work			
Replacement 11kV overhead line conductor	£25,000	250/250 x 100% = 100%	£25,000
Total Reinforcement Cost	£25,000		**£25,000**

Extension Assets:

	Cost	**Apportionment**	**Customer Contribution**
Contestable Work			
Provision and installation of 315kVA substation	£50,000	n/a	£50,000
Non-Contestable Work			
11kV joint to network	£1,000	n/a	£1,000
Total Extension Asset Cost	£51,000		**£51,000**
CIC Charges			£200

Total Connection Charge = £25,000 + £51,000 = £76,000

Section 2 – Glossary of Terms

Act	the Electricity Act 1989 (as amended)
Adoption Agreement	is an agreement for us to adopt the Contestable Work, subject to the satisfaction of certain conditions. This agreement, amongst other things, addresses a number of fundamental principles: • The transfer of title from the asset owner (normally the Customer or the ICP) to us; • The quality and safety of the adopted asset; • Any required sureties; • The transfer of Land Rights; • The procedure for us to Energise the assets installed by the ICP during the works; • The payment of any residual Connection Charges or fees; • Planning permissions and compliance with street works legislation; and • Defect correction processes, where applicable. The parties to the Adoption Agreement may vary depending on the circumstances and may be between:- • us and you • us and your appointed ICP • us, you and your appointed ICP
Bilateral Connection Agreement	an agreement between us and another LDNO setting out the terms and conditions under which an embedded network shall be entitled to be and remain connected to the Distribution System
Business Day	any day other than a Saturday, a Sunday, Christmas Day, Good Friday or a day which is a bank holiday within the meaning of the

	Banking and Financial Dealings Act 1971 and will be from 9:00am to 5:00pm (GMT or BST as applicable).
CIC Charges	are the charges detailed in parts D, E, G, H, I, and J of Section [7] of this document.
Connection Agreement	The owner/ occupier of the Premises to which the connection is to be provided will be required to enter into a Connection Agreement with us. The Connection Agreement will set out the terms upon which they will be, and remain, connected to our Distribution System. The Connection Agreement will normally be provided on our behalf by the owner/occupier's chosen Supplier for the Premises as part of their application for a supply of electricity. However, in some cases for larger connections, or where non-standard conditions exist, we will provide a site-specific Connection Agreement, which replaces any Connection Agreement put in place via the Supplier, as part of the connection process. This particular Connection Agreement will only take effect upon completion of the connection and will set out, in more detail, our rights and obligations to one another. Additionally, it may contain the technical detail of the installation being connected to the Distribution System and will require the owner/occupier of the Premises to comply with the provisions of the Distribution Code.
Connection Charge	the payment to be made by the applicant to us for the provision of the connection.
CUSC	the Connection and Use of System Code which constitutes the contractual framework for connection to, and use of, the GB Transmission System.
Customer	the person requesting the connection.
DCUSA	the Distribution Connection and Use of System Agreement designated as such by the Authority under condition 22 of the Licence
Dedicated Scheme	is defined in paragraph 1.32A.
De-energise	to deliberately prevent the flow of electricity to or from an Exit/ Entry Point for any purpose other than a system outage on the our Distribution System (and cognate expressions shall be construed accordingly).

Development Phase	the five year period, unless otherwise agreed with us, commencing on the date of Energisation of an embedded network during which period the development is to be constructed.
Disconnect	means to permanently De-energise an Exit/ Entry Point by the removal of all or part of our equipment (and cognate expressions shall be construed accordingly.
Distributed Generation Connections Guide	The guide produced by us as required by our Licence which provides guidance on the connection process for distributed generation.
Distribution Code	covers, amongst other matters, all material technical aspects relating to: • connection to, and the operation and use of a LDNO's Distribution System; and • the operation of electrical lines and electrical plant or apparatus connected to an LDNO's Distribution System. A copy of the Distribution Code can be downloaded from the Distribution Code website at www.dcode.org.uk.
Distribution System	the system (as defined in the Licence) consisting (wholly or mainly) of electric lines owned or operated by us and used for the distribution of electricity.
ECCR	the Electricity (Connection Charges) Regulations 2002 (SI 2002/93) as amended from time to time or the Electricity (Connection Charges) Regulations 2017 (SI 2017/106) as amended from time to time, as applicable. .
ECCR Prescribed Period	the relevant period from the date on which a connection is made as prescribed by the ECCR, being either (a) five years, for connections made prior to 6 April 2017; or (b) ten years, for connections made on or after 6 April 2017.
EHV	more than 22kV but not more than 72kV
Electric Lines	means any line which is used for carrying electricity to or from an Exit/ Entry Point and includes, unless the context otherwise requires:

	(a) any support for such line, that is to say, any structure, pole or other thing in, on, by or from which any such line is or may be supported, carried or suspended; (b) any apparatus connected to such line for the purpose of carrying electricity; and (c) any wire, cable, tube, pipe or other similar thing (including its casing or coating) which surrounds or supports, or is surrounded or supported by, or is installed in close proximity to, or is supported, carried or suspended in association with, any such line.
Electric Plant	means any plant, equipment, apparatus or appliance used for or for purposes connected with the distribution of electricity (including any metering equipment) other than an Electric Line.
Energise	to deliberately allow the flow of electricity to or from an Exit/ Entry Point where such a flow of electricity has never previously existed (and cognate expressions shall be construed accordingly).
Enhanced Scheme	is defined in paragraph 1.4.
Entry/ Exit Point	A point at which electricity, whether metered or unmetered, enter or exit our Distribution System.
Existing Capacity	is defined in paragraph 1.24.
Extension Assets	are assets installed to connect a party or parties to the existing distribution network but which exclude Reinforcement assets.
Fault Level	the maximum prospective current or power that will flow into a short circuit at a point on the network, usually expressed in MVA or kA.
Fault Level Contribution from Connection	is defined in paragraph 1.24.
Flexible Connections	are connection arrangements whereby a Customer's export or import of electricity is managed (often through real-time control) based upon contracted and agreed principles of available capacity. Flexible Connections typically allow quicker and cheaper connection to the Distribution System but are made on the basis

	that there is no limit on the extent to which a user's access can be interrupted.
GB Transmission System	the system consisting (wholly or mainly) of high voltage electric wires owned or operated by transmission licensees within Great Britain.
Guaranteed Standards of Performance	standards of service backed by a guarantee and set out in the Electricity (Standards or Performance) Regulations 2015 .
HV	more than 1kV but not more than 22kV
Independent Connections Provider (ICP)	a person with sufficient accreditation to carry out all or part of the Contestable Work.
Interruptions Incentive Scheme	the scheme which provides incentives on us to deliver a good level of performance in respect of customer interruptions and customer minutes lost.
Land Rights	all such rights in, under or over Land as are necessary for the construction, installation, operation, repair, maintenance, renewal or use of the Contestable Work or Non-Contestable Work.
Licensed Distribution Network Operator (LDNO)	the holder of a Licence to distribute electricity.
LV	not more than 1kV
Maximum Capacity	means in relation to any connection the maximum amount of electricity, as agreed with us and expressed in kW or kVA, that can be imported from or exported onto our Distribution System.
Meter Point Administration Number (MPAN)	is a 21 digit reference to uniquely identify Exit/ Entry Point, such as individual domestic residences.
Minimum Scheme	is defined in paragraphs 1.1 to 1.7.
New Fault Level Capacity	is defined in paragraph 1.24.
New Network Capacity	is defined in paragraph 1.24.

NETSO	means the national electricity transmission system operator for Great Britain from time to time
Point of Connection (POC)	is the point (or points) of physical connection to our existing Distribution System.
Premises	means any land, building or structure
Reinforcement	is defined in paragraphs 1.16 to 1.21.
Relevant Section of Network	is defined in paragraph 1.24.
Rent-a-Jointer Services	the service relating to hiring of resource from us to facilitate the provision of unmetered connections.
Required Capacity	is defined in paragraph 1.24.
Scheme	our network design to provide the connection.
Speculative Developments	is defined in paragraph 1.39.
Supplier	a person who holds a Supply Licence.
Supply Licence	a licence granted under section 6(1)(d) of the Act.
Supply Number	a unique identifier of those Entry/ Exit Points on the Distribution System which are used for the purposes of either taking a supply of electricity or for the connection of a distributed generator, and which forms the basis of the metering point record on the Company's registration system.
Temporary Connections	is defined in paragraph 1.19.
Validity Period	The period for which a connection Offer or POC Offer is open for acceptance.
Voltage of Connection	is the voltage at the POC between the existing distribution network and the assets used to provide the connection. For clarity, this is not necessarily the voltage of supply to the Customer
Wide Area Scheme	is defined in paragraph 1.32A.

Working Day	Any day other than a Saturday, a Sunday, Christmas Day, Good Friday or a day which is a bank holiday within the meaning of the Banking and Financial Dealings Act 1971.